Paper No. 130, Bulletin I. S. E. T., Vol. 10, No. 1, pp. 1–27, March 1973

ANALYSIS OF CIRCULAR PLATES OF NON-UNIFORM THICKNESS WITH CENTRAL HOLE

By

A. S. ARYA*, ANAND PRAKASH** AND V. J. RAO***

INTRODUCTION

In recent times the problem of analysis and design of raft foundation slabs of tall circular structures like water towers, silos, chimneys and hyperbolic cooling towers under the action of wind and earthquake forces has attracted wide attention of engineers in the research and design fields. The slabs of such type are usually circular with or without a concentric hole and are frequently provided with a tapered thickness, which is a function of the radial distance only. These slabs can be treated as axisymmetrical circular plates of variable thicknesses for analysis and design.

In the above mentioned structures, the loads are transmitted to their foundations either through columns or through cylindrical or conical shells. When columns are used, circular rafts are invariably preferred to individual footings for guarding against uneven settlement of foundation. In this case a circular ring beam connecting the column bases is provided. In the case of staging of the shell-type, the provision of a circular raft is obvious.

The loads to which the circular raft is subjected are of two types. The first type comprises of vertical loads due to the self weight of the super-structure plus the live load. The effect of these is to cause a uniform bearing pressure in the upward direction under the foundation. The second type of loads are caused by lateral forces due to wind or earthquake. As a consequence of forces of this type, a linearly varying pressure is assumed to be developed under the foundation. Thus, the total effect of the vertical and lateral loads is to cause an upward bearing pressure having triangular or trapezoidal variation under the foundation. It is customary not to allow lifting of the foundation on the windward side.

The provision of a circular raft offers two possibilities. It may be solid without a concentric hole or annular with a concentric hole. In either case, two conditions are to be satisfied. The maximum pressure under the foundation should not exceed the bearing capacity of the soil, and the minimum pressure should be either zero or of compressive nature. If a solid raft is provided, only one of the two limiting conditions can be exactly satisfied and the other by a margin. But if the raft is made annular it may be possible to satisfy exactly both the limiting conditions viz., maximum pressure equal to safe bearing value and minimum pressure equal to zero[1].

The general problem of analysis, therefore, is to analyse circular rafts with or without a concentric hole having axisymmetrical variation of thickness and subjected to a bearing pressure of the trapezoidal distribution. Usually the thickness of the raft is a maximum at the ring beam or shell support with a linear tapering variation on either side of it. The whole problem may be broken up into four parts, namely, two types of slab,

*Professor and Head, School of Research and Training in Earthquake Engineering, University of Roorkee, Roorkee.

**Reader in Civil Engineering, University of Roorkee, Roorkee.

***Graduate Student in Civil Engineering, University of Roorkee, Roorkee.

(a) with, or (b) without concentric hole; and two types of loading, (a) uniform or axisymmetric pressure, or (b) linearly varying or antisymmetrical pressure distribution. The problem is illustrated in Fig. 1. A slightly simplified version in which the ring beam support is reduced to a ring line support is given in Fig. 2.

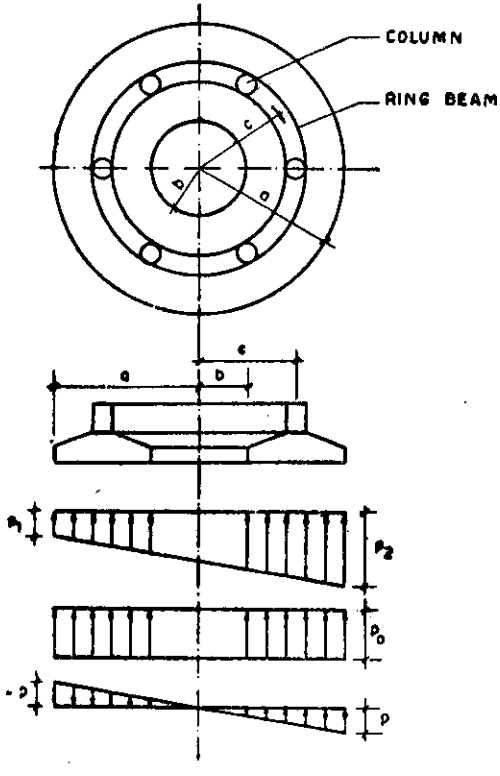

Fig. 1—Annular raft supporting a series of columns connected by a ring beam and distribution of foundation pressure under raft

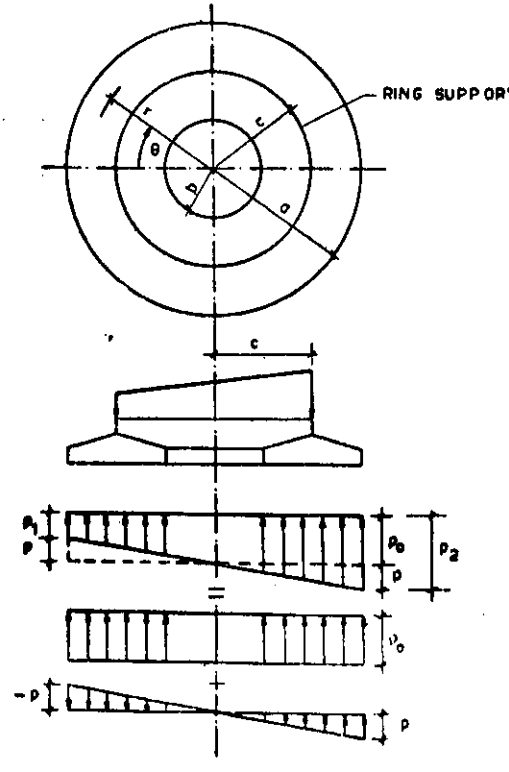

Fig. 2—Annular plate of non-uniform thickness-equivalent model for analysis

METHODS OF ANALYSIS

Two approaches are mainly employed towards a solution of the above problem. They are (a) the so called double cantilever approach and (b) the classical circular plate theory.

The first method of analysis more commonly adopted by design engineers for annular rafts is to assume the portion of the raft projecting on either side of the ring support to act as a cantilever subject to a uniform or varying pressure as the case may be.[2,3] The slab is then mainly reinforced for the cantilever moments, using only nominal reinforcement in the tangential direction. In the case of solid raft, the inner portion is treated as a circular plate and designed for the resulting moments in radial and tangential directions in an approximate manner. The projecting part of the slab is designed as cantilever. The major draw-back of the cantilever approach is that the requirements of the circumferential bending moment are not adequately considered. Also no consideration is given to the Poisson ratio effect nor to the effect of thickness variation. Perhaps, this could be a rational approach after cracks have occurred radially due to the circumferential moment.

The second approach based on the classical circular plate theory has been widely adopted by various authors as applied to foundation slabs of tall elevated water towers[1,3,4,5] as well to chimney foundations[6,7,8]. An examination of the contributions mentioned above reveals that almost all the approaches towards a solution of the problem mainly aimed at improving the formulation based on the classical circular plate theory for plates having *uniform* thickness. The ring beam support was assumed to be either a simple or built-in support. Moreover, the width of the ring beam support was usually replaced by a ring-line support for simplifying the analysis.

In this investigation, the plate-theory approach has been adopted but taking into account the variation of thickness. For reasons of simplicity the classical circular plate theory as per Kirchhoff-Love formulation is used even though more refined theories like Reissner's theory,[9] Reissner-Goodier theory[10] have been developed which take into account the effect of shear deformations as well. The difference in the results obtained by the two is reported to be rather small.

BASIC ASSUMPTIONS

Besides well-known assumptions that form the basis for the development of the classical theory of circular plates as per Kirchhoff-Love formulation, it is also assumed that :

1. there is no abrupt change in thickness and therefore the expressions for bending and twisting moments developed for plates of constant thickness hold good with sufficient accuracy to the case of plates of variable thickness also.
2. there are no stresses due to temperature variations.
3. the thickness at any point in the plate is a function of the radial distance only.

EQUILIBRIUM EQUATIONS

An element abcd which is cut out of the circular plate by two adjacent radial planes ad and bc separated by an incremental angle $d\theta$ and by two cylindrical surfaces ab and cd of radii r and r+dr respectively is shown in Fig. 3(a). The positive directions of the bending moments M_r and M_t and the twisting moments M_{rt} per unit length, acting on the element will be taken as shown in Fig. 3(b).

The well-known general moment-curvature relations in terms of the deflection W of the plate are given by

$$M_r = -D\left[\frac{\partial^2 w}{\partial r^2} + \mu\left(\frac{1}{r}\frac{\partial w}{\partial r} + \frac{1}{r^2}\frac{\partial^2 w}{\partial \theta^2}\right)\right] \tag{1}$$

$$M_t = -D\left[\left(\frac{1}{r}\frac{\partial w}{\partial r} + \frac{1}{r^2}\frac{\partial^2 w}{\partial \theta^2}\right) + \mu\frac{\partial^2 w}{\partial r^2}\right)\right] \tag{2}$$

$$M_{rt} = (1-\mu)\, D\left[\left(\frac{1}{r}\frac{\partial^2 w}{\partial r\,\partial \theta} - \frac{1}{r^2}\frac{\partial w}{\partial \theta}\right)\right] \tag{3}$$

Similarly the expressions for the shear forces Q_r and Q_t and reaction V_t in terms of the deflection w are as follows:

$$Q_r = -D\left[\frac{\partial^3 w}{\partial r^3} + \frac{1}{r}\frac{\partial^2 w}{\partial r^2} - \frac{1}{r^2}\frac{\partial w}{\partial r} + \frac{1}{r^2}\frac{\partial^3 w}{\partial r\,\partial \theta^2} - \frac{2}{r^3}\frac{\partial^2 w}{\partial \theta^2}\right] - \frac{dD}{dr}\left[\frac{\partial^2 w}{\partial r^2} + \mu\left(\frac{1}{r}\frac{\partial w}{\partial r} + \frac{1}{r^2}\frac{\partial^2 w}{\partial \theta^2}\right)\right] \tag{4}$$

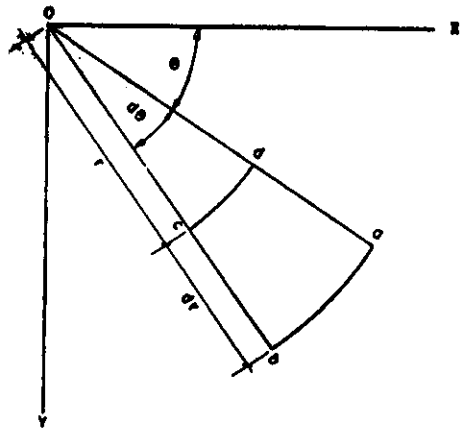

a _ AXES OF REFERENCE

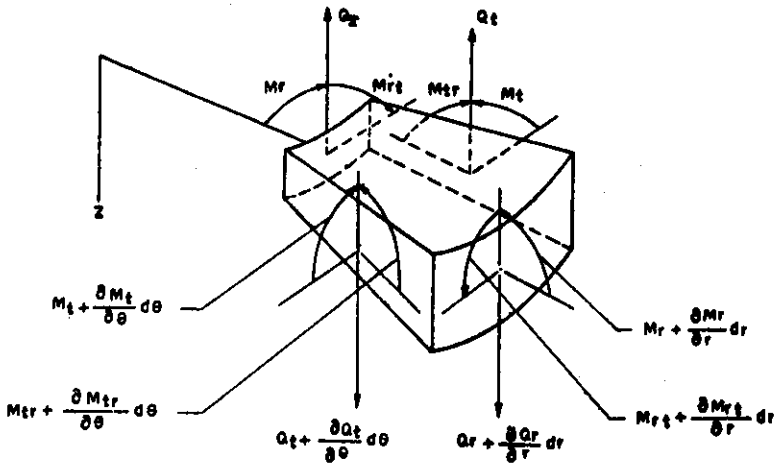

b _ MOMENTS AND FORCES

Fig. 3—Typical plate element

$$Q_t = -D\left[\frac{1}{r}\frac{\partial^3 w}{\partial r^2\,\partial\theta} + \frac{1}{r^2}\frac{\partial^2 w}{\partial r\,\partial\theta} + \frac{1}{r^3}\frac{\partial^3 w}{\partial\theta^3}\right] - \frac{dD}{dr}\left[\left(\frac{1-\mu}{r}\right)\frac{\partial^2 w}{\partial r\,\partial\theta} - \left(\frac{1-\mu}{r^2}\right)\frac{\partial w}{\partial\theta}\right] \quad (5)$$

$$V_r = -D\left[\frac{\partial^3 w}{\partial r^3} + \frac{1}{r}\frac{\partial^2 w}{\partial r^2} - \frac{1}{r^2}\frac{\partial w}{\partial r} + \left(\frac{2-\mu}{r^2}\right)\frac{\partial^3 w}{\partial r\,\partial\theta^2} - \left(\frac{3-\mu}{r^3}\right)\frac{\partial^2 w}{\partial\theta^2}\right]$$
$$-\frac{dD}{dr}\left[\frac{\partial^2 w}{\partial r^2} + \mu\left(\frac{1}{r}\frac{\partial w}{\partial r} + \frac{1}{r^2}\frac{\partial^2 w}{\partial\theta^2}\right)\right] \quad (6)$$

Finally the differential equation takes the following form

$$D\left[\frac{\partial^4 w}{\partial r^4}+\frac{2}{r}\frac{\partial^3 w}{\partial r^3}-\frac{1}{r^2}\frac{\partial^2 w}{\partial r^2}+\frac{1}{r^3}\frac{\partial w}{\partial r}+\frac{2}{r^2}\frac{\partial^4 w}{\partial r^2\,\partial\theta^2}-\frac{2}{r^3}\frac{\partial^3 w}{\partial r\,\partial\theta^2}+\frac{4}{r^4}\frac{\partial^2 w}{\partial\theta^2}+\frac{1}{r^4}\frac{\partial^4 w}{\partial\theta^4}\right]+$$
$$\frac{dD}{dr}\left[2\frac{\partial^3 w}{\partial r^3}+\left(\frac{2+\mu}{r}\right)\frac{\partial^2 w}{\partial r^2}-\frac{1}{r^2}\frac{\partial w}{\partial r}+\frac{2}{r^2}\frac{\partial^3 w}{\partial r\,\partial\theta^2}-\frac{3}{r^3}\frac{\partial^2 w}{\partial\theta^2}\right]+$$
$$\frac{d^2D}{dr^2}\left[\frac{\partial^2 w}{\partial r^2}+\frac{\mu}{r}\frac{\partial w}{\partial r}+\frac{\mu}{r^2}\frac{\partial^2 w}{\partial\theta^2}\right]=q \tag{7}$$

This is a fourth order, linear, partial differential equation governing the unsymmetrical bending of circular plates of non-uniform thickness.

The above differential equation can be presented in a simple and compact invariant form[11],

$$\nabla^2(D\,\nabla^2 w)-(1-\mu)\,\square^4(D,\,w)=q \tag{8}$$

where

$$\nabla^2 w=\frac{\partial^2 w}{\partial r^2}+\frac{1}{r}\frac{\partial w}{\partial r}+\frac{1}{r^2}\frac{\partial^2 w}{\partial\theta^2} \tag{9}$$

and in general

$$\square^4(D,\,w)=\frac{\partial^2 D}{\partial r^2}\left(\frac{1}{r}\frac{\partial w}{\partial r}+\frac{1}{r^2}\frac{\partial^2 w}{\partial\theta^2}\right)-2\frac{\partial}{\partial r}\left(\frac{1}{r}\frac{\partial D}{\partial\theta}\right)\frac{\partial}{\partial r}\left(\frac{1}{r}\frac{\partial w}{\partial\theta}\right)+\frac{\partial^2 w}{\partial r^2}\left(\frac{1}{r}\frac{\partial D}{\partial r}+\frac{1}{r^2}\frac{\partial^2 w}{\partial\theta^2}\right) \tag{10}$$

In particular, since the thickness does not vary with θ, the derivatives of D with respect of θ will vanish.

SPECIAL CASE OF AXI-SYMMETRICAL BENDING

In the axisymmetrical case of loading, the twisting moment M_{rt} and circumferential shear force Q_t will be zero. Also the deflection w and hence the shear force Q_r and moments M_r and M_t will be independent to θ. Therefore, the derivatives with respect to θ vanish and the general equations (1 and 2) given above will reduce to the following:

$$M_r=-D\left(\frac{d^2 w}{dr^2}+\frac{\mu}{r}\frac{dw}{dr}\right)=D\left(\frac{d\Phi}{dr}+\frac{\mu}{r}\Phi\right) \tag{11}$$

$$M_t=-D\left(\frac{1}{r}\frac{dw}{dr}+\mu\frac{d^2 w}{dr^2}\right)=D\left(\frac{\Phi}{r}+\mu\frac{d\Phi}{dr}\right) \tag{12}$$

in which Φ is the radial slope of the deflected surface and is given by $\Phi=-\dfrac{dw}{dr}$

The radial shear Q_r takes the following form

$$Q_r=D\left[\frac{d^3 w}{dr^3}+\frac{1}{r}\frac{d^2 w}{dr^2}-\frac{1}{r^2}\frac{dw}{dr}\right]+\frac{dD}{dr}\left[\frac{d^2 w}{dr^2}+\frac{\mu}{r}\frac{dw}{dr}\right] \tag{13}$$

or

$$Q_r=-D\left[\frac{d^2\Phi}{dr^2}+\frac{1}{r}\frac{d\Phi}{dr}-\frac{\Phi}{r^2}\right]-\frac{dD}{dr}\left[\frac{d\Phi}{dr}+\mu\frac{\Phi}{r}\right] \tag{14}$$

and the differential equation (10) reduces to

$$D\left[\frac{d^4 w}{dr^4}+\frac{2}{r}\frac{d^3 w}{dr^3}-\frac{1}{r^2}\frac{d^2 w}{dr^2}+\frac{1}{r^3}\frac{dw}{dr}\right]+\frac{dD}{dr}\left[2\frac{d^3 w}{dr^3}+\left(\frac{2+\mu}{r}\right)\frac{d^2 w}{dr^2}-\frac{1}{r^2}\frac{dw}{dr}\right]+\frac{d^2 D}{dr^2}\left[\frac{d^2 w}{dr^2}+\frac{\mu}{r}\frac{dw}{dr}\right]=q \tag{15}$$

Equation (15) is a fouth-order, linear, ordinary differential equation governing the symmetrical flexure of circular plates of non-uniform thickness.

SOLUTION OF THE GOVERNING EQUATIONS

A critical study of the literature on circular plates of variable thickness indicates that analytical solutions to the differential equations (7), (8) and (15) were usually difficult to be obtained. Therefore, the thickness variations chosen were mathematically simple so that the analysis became less involved. For a number of such variations, solutions in closed or series form were obtained for symmetrical bending problem[12-19] as well as antisymmetrical problem.[20-22]

To overcome the limitations of the analytical solutions, many authors resorted to numerical methods to solve the problems.[23-33] One of the numerical methods commonly employed for the solution of non-uniform circular plate problems was to divide the plate into a series of concentric rings of finite width and of uniform thickness. The uniform plate theory was then applied to each of these rings ensuring proper satisfaction of the boundary or continuity conditions between two consecutive rings. Progressing this way the boundary conditions at the ends were eventually satisfied. This method though versatile in its applications had the drawbacks that large number of divisions of the plate were necessary to approximate the modified thickness variation more closely to the actual one.

Finite-difference method was used[34, 35] in the problem of gas turbine disks. It had the advantage that the equations for plates of varying thickness could be reduced to finite difference form directly. This method is used to obtain numerical solutions to the problem undertaken in this paper.

GENERAL SOLUTION

The general solution due to Clebsch[36] of the biharmonic (homogeneous) equation in polar coordinates for any unsymmetrical loading defining the flexure of circular plates of uniform thickness is given by

$$w = R_0 + \sum_{m=1}^{\infty} R_m \cos m\theta + \sum_{m=1}^{\infty} R_m' \sin m\theta \tag{16}$$

in which $R_0, R_1, R_2, \ldots\ldots, R_1', R_2', \ldots\ldots$ are function of the radial distance r only. The solution R_0, being independent of the angle θ, represents symmetrical bending of annular as well as solid circular plates and vanishes for the anti-symmetrical bending case. The linearly varying anti-symmetrical load q_L can be represented as

$$q_L = p\frac{r}{a}\cos\theta \tag{17}$$

and correspondingly the deflection w can be represented by the first term of the cosine series namely $R_1 \cos\theta$. Omitting the subscript for convenience we may write

$$w = R\cos\theta \tag{18}$$

Substituting these expressions in the differential equation (7),

$$D\left[R'''' + \frac{2}{r}R''' - \frac{1}{r^2}R'' + \frac{1}{r^3}R' - \frac{2}{r^2}R'' + \frac{2}{r^3}R' - \frac{4}{r^4}R + \frac{1}{r^4}R\right]$$
$$+ D'\left[2R''' + \left(\frac{2+\mu}{r}\right)R'' - \frac{1}{r^2}R' - \frac{2}{r^2}R' + \frac{3}{r^3}R\right]$$
$$+ D''\left[R'' + \frac{\mu}{r}R' - \frac{\mu}{r^2}R\right] = q\frac{r}{a} \tag{19}$$

in which the superscript primes denote order of differentiation with respect to r.

Accordingly the expressions for the internal forces take the following form

$$M_r = -D\left[R'' + \mu\left(\frac{1}{r}R' - \frac{1}{r^2}R\right)\right]\cos\theta \tag{20}$$

$$M_t = -D\left[\frac{1}{r}R' - \frac{1}{r^2}R + \mu R''\right]\cos\theta \tag{21}$$

$$M_{rt} = (1-\mu)\,D\left[-\frac{1}{r}R' + \frac{1}{r^2}R\right]\sin\theta \tag{22}$$

$$Q_r = -D\left[R''' + \frac{1}{r}R'' - \frac{2}{r^2}R' + \frac{2}{r^3}R\right]\cos\theta$$
$$-D'\left[R'' + \mu\left(\frac{1}{r}R' - \frac{1}{r^2}R\right)\right]\cos\theta \tag{23}$$

$$Q_t = -D\left[-\frac{1}{r}R'' - \frac{1}{r^2}R' + \frac{1}{r^3}R\right]\sin\theta$$
$$-D'\left[-\left(\frac{1-\mu}{r}\right)R' + \left(\frac{1-\mu}{r^2}\right)R\right]\sin\theta \tag{24}$$

and finally,

$$V = -D\left[R''' + \frac{1}{r}R'' - \frac{1}{r^2}R' - \left(\frac{2-\mu}{r^2}\right)R' + \left(\frac{3-\mu}{r^3}\right)R\right]\cos\theta$$
$$-D'\left[R'' + \mu\left(\frac{1}{r}R' - \frac{1}{r^2}R\right)\right]\cos\theta \tag{25}$$

VARIABLES INVOLVED

The radius of the central hole 'b' and the radius of the ring support 'c' will be expressed in terms of the radius of the plate 'a' which will be taken as unity. In the case of plate without hole, b will refer to the radis of the uniform portion of the plate. Similarly, the thickness of the plate at the ring support will be taken as unity and the other two thicknesses, one at each boundary will be expressed in terms of four dimensionless ratios viz., $\alpha = c/a$, $\beta = b/a$, $\tau_{bc} = t_b/t_c$ and $\tau_{ac} = t_a/t_c$. For a solid plate t_b will be taken to be the uniform thickness from centre of the plate to a radius equal to b.

The expressions defining the thickness variations and consequently the variation of the flexural rigidity will now be listed (Refer Fig. 4). Thickness t at any radial distance

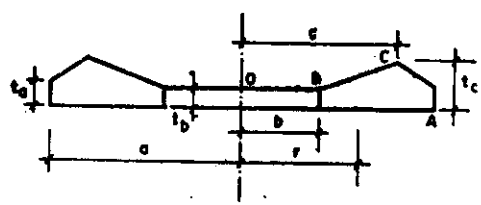

Fig. 4—Variation of plate thickness

$r = \rho a$ from the center of the plate is given by

$$t = t_c\left[1 - \frac{1-\tau_{bc}}{\alpha-\beta}(\alpha-\rho)\right], \ (\beta \leqslant \rho \leqslant \alpha) \tag{26a}$$

$$t = t_c\left[1 - \frac{1-\tau_{ac}}{1-\alpha}(\rho-\alpha)\right], \ (\alpha \leqslant \rho \leqslant 1) \tag{26b}$$

Variation of Flexural Rigidity D

$$D=D_c\left[1-\frac{1-\tau_{bc}}{\alpha-\beta}(\alpha-\rho)\right]^3, (\beta\leqslant\rho\leqslant\alpha) \tag{27a}$$

$$D=D_c\left[1-\frac{1-\tau_{ac}}{1-\alpha}(\rho-\alpha)\right]^3, (\alpha\leqslant\rho\leqslant 1) \tag{27b}$$

in which $D_c=\frac{E\,t_c^3}{12(1-\mu^2)}$.

For particular values of ratio α, β, τ_{bc} and τ_{ac}, the value of D obtained from the above expressions will be a constant. This fact helps in expressing D′ and D″ conveniently, in terms of D itself.

Thus one obtains for range $\beta\leqslant\rho\leqslant\alpha$

$$\frac{D'}{D}=k_1/a \quad \text{where}$$

$$k_1=3\left[\frac{1-\tau_{bc}}{\alpha-\beta}\right]\left[\frac{1}{1-\frac{1-\tau_{bc}}{\alpha-\beta}(\alpha-\rho)}\right] \tag{28a}$$

and $D''/D=k_2/a^2$ where

$$k_2=6\left[\frac{1-\tau_{bc}}{\alpha-\beta}\right]\left[\frac{1}{\left[1-\frac{1-\tau_{bc}}{\alpha-\beta}(\alpha-\rho)\right]^2}\right] \tag{28b}$$

For range $\alpha\leqslant\rho\leqslant 1$

$$D'/D=k_3/a \text{ where}$$

$$k_3=-3\left[\frac{1-\tau_{ac}}{1-\alpha}\right]\left[\frac{1}{1-\frac{1-\tau_{ac}}{1-\alpha}(\rho-\alpha)}\right] \tag{29a}$$

and $D''/D=k_4/a^2$ where

$$k_4=6\left[\frac{1-\tau_{ac}}{1-\alpha}\right]\left[\frac{1}{\left[1-\frac{1-\tau_{ac}}{1-\alpha}(\rho-\alpha)\right]^2}\right] \tag{29b}$$

BOUNDARY CONDITIONS

For the circular plates, the boundary conditions will be as shown in Table 1.

At the change of section in solid plates the functions w, ϕ, M and Q will be continuous. At the section of ring load applied through the ring beam or the shell, the functions w and ϕ will be continuous, moment M will also be continuous when simple support condition is assumed and the change of the shear force will be equal to the load transmitted through the ring beam.

FINITE-DIFFERENCE EQUATIONS

For deriving the finite-difference patterns central-difference approximations of the first order are used with the error in the corresponding derivatives being of the order h^2 where h is the interval size. In some particular cases, as will be described later, use is

TABLE I. BOUNDARY CONDITIONS FOR CIRCULAR PLATES

Edge	Annular Plates		Plates without hole	
	Antisymmetrical Bending	Axisymmetrical	Antisymmetrical	Axisymmetrical
Outer $r=a$	$M_r=0$ $V_r=0$	$M_r=0$ $Q_r=0$	$M_r=0$ $V_r=0$	$M_r=0$ $Q_r=0$
Inner $r=b$	$M_r=0$ $V_r=0$	$M_r=0$ $Q_r=0$		
Centre $r=0$			$w=0$ $M_r=0$	$\phi=0$ $Q_r=0$

made of forward and backward-differences also. They are second order approximations with the error in the corresponding derivatives being of the order h^2. The patterns derived are shown in Figs (5) to (7). The expressions for the terms A_1 to A_{38} used therein are given in Appendix I.

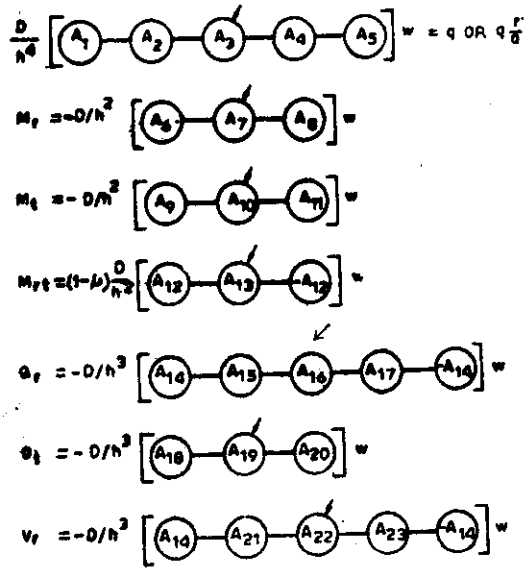

Fig. 5—Central difference patterns

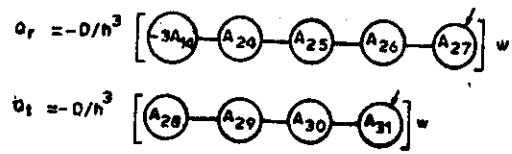

Fig. 6—Backward difference patterns

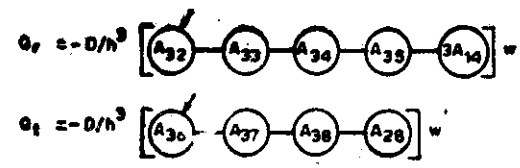

Fig. 7—Forward difference patterns

For formulating the finite difference equations, the difference patterns are substituted in the plate equation at the nodal points. Let the radial distance from $r=b$ to $r=a$ for annular plates and $r=0$ to $r=a$ for solid plates be divided into n equal parts such that a node falls at $r=c$. Let the deflection w be taken zero at the ring beam point. Then at

two divisions or more away from the edges, the central finite-difference patterns can be written as such. But for two nodes, one on the periphery and one just inside, the patterns are to be modified so as to satisfy the boundary conditions. In the case of annular plates no difficulty arises. But in the case of solid plate axisymmetrically loaded, a singularity arises at r=0 since the expressions become infinite. In this case an additional equation is obtained by writing the shear condition at the ring beam using the backward and forward difference patterns for determining shears on the inside and outside of the ring beam. The same difficulty arises when computing the moments at the centre of the above plate. This is avoided by assuming the moment at the neighbouring point to be equal to that at centre. The difference is expected to be small since 100 divisions of the radius are used for these plates.

RESULTS

Using the finite difference equations, solutions to a total of 600 cases involving a variety of thickness ratios and plate-dimension ratios have been obtained. These also include the particular cases when the thickness is uniform. For checking the accuracy of the computed results, the results obtained for the uniform thickness case for both symmetrical and anti-symmetrical loadings and for Poisson's ratio equal to 0·15 are compared with the results obtained by Arya and Pathak by analytical method[5]. There is an excellent agreement between both sets of results. The results for the non-uniform thickness of plate are checked by applying statical equilibrium condition to a quadrant of the plate between external forces and moments and the internal reactive forces and moments. The checks are found satisfactory.

For a selected number of cases, the principal bending moments M_r and M_t are presented here in graphical form for ready use in design problems. For the annular plates, the results are plotted in Figs. 8 to 43 where the parameter combinations have been considered as given in Table 2. For each combination of β and α in each figure ten combinations of τ_{bc} and τ_{ac} are considered as given below

τ_{bc}	0.2	0.2	0.2	0.5	0.5	0.5	0.8	0.8	0.8	1.0
τ_{ac}	0.2	0.5	0.8	0.2	0.5	0.8	0.2	0.5	0.8	1.0

The last case $\tau_{bc}=\tau_{ac}=1.0$ pertains to uniform plates. Thus the results of plates of linearly varying thickness having different tapers are automatically compared with those for the uniform plates.

TABLE 2. PARAMETER COMBINATIONS AND REFERENCE TO FIGURES FOR ANNULAR PLATES

Diagram for Moment	Load	Figure numbers for the parameter combinations of β and α								
		β=0.2 α=0.6	0.3 0.6	0.3 0.7	0.4 0.6	0.4 0.7	0.4 0.8	0.5 0.7	0.5 0.7	0.6 0.8
Circumferential Moment M_t	Symmetrical	8	9	10	11	12	13	14	15	16
	Antisymmetrical	17	18	19	20	21	22	23	24	25
Radial Moment M_r	Symmetrical	26	27	28	29	30	31	32	33	34
	Antisymmetrical	35	36	37	38	39	40	41	42	43

For the solid plates, it was seen[1] that the most suitable location of the ring beam support was at about $r=0.8a$. Thus the value of $\alpha=c/a$ was adopted as 0.8. Three values of β equal to 0.4, 0.5 and 0.6 have been adopted for drawing the diagrams in Figs. 44 to 55. The figure references are given in Table 3. The taper combinations of τ_{bc} and τ_{ac} used for solid plates are the same as for the annular plates given above.

TABLE 3. PARAMETER COMBINATIONS AND FIGURE NUMBERS FOR SOLID PLATES

Moment	Load	Figure Numbers for parameter combinations of β and α		
		$\beta=0.4$ $\alpha=0.8$	0.5 0.8	0.6 0.8
Circumferential M_t	Symmetrical	44	45	46
	Antisymmetrical	47	48	49
Radial M_r	Symmetrical	50	51	52
	Antisymmetrical	53	54	55

CONCLUSIONS

On studying the variation of radial and circumferential bending moments for various cases of plate thickness variations as shown in Fig. 8 to 55, the following conclusions are drawn.

1. The magnitude of the maximum radial bending moment depends a great deal on thickness variation of the plate. The maximum radial bending moment occurs under ring support in all cases.
2. The magnitude of circumferential bending moment at any point changes significantly with changes in thickness variation of the plate. The magnitude and point of maximum circumferential bending moment also changes with change in thickness variation. The value of the maximum moment increases with larger taper in the thickness of the plate.

In the light of the above observations, it will be either unsafe or uneconomical to design a varying thickness plate using the expressions for bending moments corresponding to a plate of uniform thickness. It will therefore be desirable to adopt the design values based on rational values given in the diagrams in the paper.

NOTATION

a	External radius of circular plate
b	Radius of central hole in the plate
c	Radius of ring beam support
D	Flexural rigidity of plate
D′	First differential coeff. of D with respect to r
D_c	Flexural rigidity of plate at ring support
E	Modulus of elasticity
h	Element size in finite difference patterns
k_1, k_3, k_2, k_4	Constants defined in the paper
m	Numerical constant
M_r	Radial bending moment per unit length of circumferential section of plate
M_t	Circumferential bending moment per unit length of radial section of the plate

M_{rt}	Twisting moment per unit length of radial or circumferential section
m_r	Dimensionless coefficient corresponding to M_r
m_t	Dimensionless coefficient corresponding to M_t
p	Pressure intensity underneath the circular raft
P	Concentric knife-edged ring load or reaction from support
Q_r, Q_t	Vertical shear force per unit length on circumferential and radial sections of the plate respectively
r	Radial distance of any point from the centre of the plate
R, R_0, R_m	Coefficients used in series expansion of the vertical deflection of the plate
R′	First Differential Coefficient of R with respect to r
t	Thickness of plate at any point
t_a	Thickness of plate at outer boundary
t_b	Thickness of plate at inner boundary
t_c	Thickness of plate at ring support
V_r	Kirchhoff' Shear per unit length of circumferential section
w	Vertical deflection of plate
α	Ratio of radius of ring support to plate radius
β	Ratio of hole radius to plate radius
ρ	Ratio of radial distance r to plate radius
θ	Angular distance in Polar co-ordinates
Φ	Radial slope of the deflected surface of plate
μ	Poisson's ratio
τ_{bc}	Ratio of thickness of plate at inner boundry to that at ring support
τ_{ac}	Ratio of thickness of plate at outer boundary to that at ring support
∇^2	Laplacian differential operator
∇^4	Biharmonic differential operator
$\square^4$	A bilinear differential operator

REFERENCES

1. Arya, A. S. "Fundations of Tall Circular Structures," The Indian Concrete Journal, Vol. 40, No. 4, April 1966.
2. Eriksen, B., "Theory and Practice of Structural Design Applied to Reinforced Concrete", First ed., Concrete Publications, London, 1953.
3. Jai Krishna, and Jain, O. P., "Plain and Reinforced Concrete", Vol. I and II, 6th ed., Nemchand and Bros., Roorkee, India, 1966.
4. Brijesh Chandra, and Chandrasekeran, A. R , "The Design of Circular Footings for Water Towers, Chimneys, and Similar Structures", The Indian Concrete Journal, Vol. 39, No. 8, August 1965.
5. Arya, A. S., and Pathak, A. S., "Circular Plates Carrying Linearly Varying Load", Journal of the Institution of Engineers (India), Vol. 47, No. 7, March (1967), AMR 21 (4033).*
6. Smith, John W., and Max Zar., "Chimney Foundations", J. Amer Conc. Inst., Vol. 61, No. 6, pp. 673–700, June 1964.
7. Chu, K. H., and Afandi, O. F., "Analysis of Circular and Annular Slabs for Chimney Fundations", J. Amer. Conc. Inst., Vol. 63, No. 12, pp. 1425–1447, December 1966, AMR 20 (3947).
8. Sergev, S., and Kashani-Sabet, M. H., "Strength and Deflection of Circular Uniformly Loaded Slab Supported Between Centre and Periphery", J. Amer. Concrete, Inst., Vol. 60, No. 2, pp. 281–293, February 1962.
9. Reissner, E., "On the Theory of Bending of Elastic Plates", J. Math. Phys., Vol. 23, pp. 184–191, 1944, (269).
10. Lehnhoff, T. F., "The Influence of Transverse Shear on the Small Displacement Theory of Circular Plates", Doctoral Thesis (unpublished Dept. TAM, University of Illinois, (1968).

*Numbers after the date refer to the Applied Mechanics Reviews and/or the references listed in: SLITER, G. E., NIKOLAI, R. J., BOREST, A. P., "Elastic Plates: Annotated Bibliography 1930–1962", U. I. Eng. Exp. Sta. Tech. Rep. 10. V. 62, 25, (1964).

11. Mansfield, E. H.. "On the Analysis of Elastic Plates of Variable Thickness", Quart. J. Mech. App. Math., Vol. 15, No. 2, pp. 167–192, May 1962, AMR 16 (740), (543).
12. Conway, H. D., "The Bending of Symmetrically Loaded Circular Plates of Variable Thickness", J. Appl. Mech., Vol. 15, No. 1, pp. 1–6, March 1968, AMR 1 (802), (524).
13. Conway, H. D., "Note on the Bending of Circular Plates of Variable Thickness", J. Appl. Mech., Vol. 16, No. 2, pp. 209–210, June 1949, AMR 3 (1659), (525).
14. Conway, H. D., "Axially Symmetric Plates with Linearly Varying Thickness", J. Appl. Mech., Vol. 18, No. 2, pp. 140–142, June 1951, AMR 4 (4411), (526).
15. Janssens, P., and Bastin, H., "De'flexion des Plaques Circularies Syme'triques D'epaisseur Variable", Acad. Roy. de Belgique-Bull. de la Classes des Sciences, Vol. 49, No. 2, pp. 153–172, 1963.
16. Conway, H. D., "Analysis of Some Circular Plates on Elastic Foundations and the Flexural Vibration of Some Circular Plates", J. Appl. Mech., Vol. 22, No. 2, pp. 275–276, June 1955, (471).
17. Bisshopp, K. E., "Lateral Bending of Symmetrically Loaded Conical Disks", Quart, Appl. Math., Vol. 2, pp. 205–217, October 1944, (520).
18. Kovalenko, A. D., "Circular Plates of Variable Thickness, (in Russian), Kruglie Plastini Peremennoi Tolshini, State Publishing House for Physico-Mathematical Literature, Moscow, 294 pp.+ ill. 1959, AMR 13 (3321), AMR 15 (3887).
19. Gradwell, C. F., "Asymmetrical Bending of Tapered Disks", Aircr. Engng., Vol. 22, No. 257, pp. 209–212, July 1950, AMR 4 (1512), (537).
20. Conway, H. D,, "Non-axial Bending of Ring Plates of Varying Thickness", J. Appl. Mech., Vol. 25, No. 3, pp. 386–388, September (1958) AMR 11 (1547), (530).
21. Latsinnik, I. F., and Grigorenko, Ya. M., "Bending of a Circular Plate with Linearly Varying Thickness Under Anti-Symmetric Loads", (In Russian), Prikl. Mekh., Vol. 1, No. 7, pp. 67–76, 1965 AMR 19 (1429).
22. Baclig, E. S., and Conway, H. D., "Symmetrical Bending of a Cylindrically Aerolotropic Tapered Disk", J. Appl. Mech. Vol. 23, No. 1, pp. 11–14, March 1956, AMR 9 (1389), (519).
23. Nilsson, E., "Stress Distribution in Plates With Rotational Symmetry and Evenly Distributed Load", (in Swedish), Tekn. Tidskr., Vol. 79, pp. 485–487, June (1949), AMR 3 (1663).
24. Gawain, T. H., and Curry, E. C., Stresses in Laterally Loaded Disks of Non-Uniform Thickness", Prod. Engng., Vol. 20, pp 130–134, December 1949, AMR 3 (1882), (535).
25. Gittleman, W., "Circular Plates of Non-Uniform Thickness", Aircr. Engng., Vol. 22 No. 258, pp. 224–227, August 1950, AMR 4 (2870) (536).
26. Paschoud, J., "Numerical Calculation of the Circular Deflection of Plates of Revolution with Variable Thickness", (in French), Schweiz. Arch., Vol. 17, No. 10, pp. 305–312. October (1951), AMR 5 (1030).
27. Chenea, P. F., and Naghdi, P. M , "Graphical Analysis of Axially Symmetrical Plates with Variable Thickness", J. Appl. Mech., Vol. 19, No. 4, pp. 561–563, December (1952), AMR 6 (3031), (533).
28. Boston, D. C. "Deformations and Stresses in Symmetrically Loaded Circular Plates of Variable Thickness", J. Roy. Aero, Soc. Vol. 57, No. 511, pp. 449–454, July 1953, AMR 7 (451), (521).
29. Havelka, K., "The Analysis of Prestressed Circular Footing Slabs of Variable Thickness, (in Czech), (Predpate Kruhove Zakladove Dosky Premenneho prierezu), Bratislava, Vydavatel'stvo Slovenskej Akademie Vied, 229 pp., 1956, AMR 16 (2044).
30. Blumenfeld, M., Circular Symmetrically Loaded Plates of Constant and Variable Thickness, Calculated by the Three Unknown Methods", (in Rumanian), Bull. Inst. Politehn., Bucuresti, Vol. 24, pp. 95–118, July/September 1962, AMR 17 (7035).
31. Jirousek, J., "Circular Plates of Variable Thickness (in Czech), Stavebnicky Casopsis, Vol. 10, No. 6, pp. 337–361, 1962, AMR 16 (3815).
32. Neumann, R., "Graphical Method Applied to Determination of Thickness of Roller Ring Plates Subjected to a Bending Moment", (in German), Maschinenbautechnik, Vol. 11, No. 11, pp. 568–574, November (1962), AMR 16 (5233).
33. Hodson, B. A., "A Method of Calculating Stresses in a Non-Uniformly Thick Disc Subjected to Asymmetric Loads Adapted to a Tabular Computation", J. Roy. Aero. Soc., Vol. 57, No. 511, pp. 658–660, October 1953.
34. Manson, S. S., "The Determination of Elastic Stresses in Gas Turbine Disks", NACA TN No. 1279, pp. 1–30, May (1947), AMR 1 (423).
35. Manson, S. S., "Determination of Elastic Stresses in Gas Turbine Disks", NACA Rep. No. 871, 11 pp., (1947), issued in 1949, AMR 2 (1375).
36. Timoshenko, S., and Woinowsky-Krieger, S., "Theory of Plates and Shells, 2nd ed., McGraw-Hill, New York 1959, first ed. (1940).

APPENDIX

The following expressions appear in the finite different patterns wherein

$$A=\frac{h}{a}, \quad H=\frac{h}{r}$$

These apply as such to the range $\beta \leqslant \rho \leqslant \alpha$. For uniform plate $k_1=k_2=0$. For range $\alpha \leqslant \rho \leqslant 1$, replace k_1 by k_3 and k_2 by k_4.

$$A_1 = 1-H-k_1A$$

$$A_2 = -4+2H+2k_1A+k_2A^2+(2+\mu)\,k_1AH-3H^2+\frac{3}{2}k_1AH^2-\frac{3}{2}H^3-\frac{\mu}{2}k_2HA^2$$

$$A_3 = 6-2k_2A^2-2(2+\mu)\,k_1AH+6H^2-\mu k_2A^2H^2+3k_1AH^3-3H^4$$

$$A_4 = -4-2H-2k_1A+k_2A^2+(2+\mu)\,k_1AH-3H^2+\frac{3}{2}k_1AH^2+\frac{3}{2}H^3+\frac{\mu}{2}k_2HA^2$$

$$A_5 = 1+H+k_1A$$

$$A_6 = 1-\frac{\mu}{2}H \qquad A_9 = \mu-H/2 \qquad A_{12} = \mu\,H/2$$

$$A_7 = -2-\mu H^2 \qquad A_{10} = -2\mu-H^2 \qquad A_{13} = H^2$$

$$A_8 = 1+\frac{\mu}{2}H \qquad A_{11} = \mu+H/2 \qquad A_{14} = -1/2$$

$$A_{15} = 1+H+k_1A+H^2-\frac{\mu}{2}k_1\,AH \qquad A_{18} = -H+\frac{1}{2}H^2+\frac{1-\mu}{2}k_1AH$$

$$A_{16} = -2H-2k_1A-\mu k_1AH^2+2H^3 \qquad A_{19} = 2H+(1-\mu)\,k_1AH^2+H^3$$

$$A_{17} = -1+H+k_1A-H^2+\frac{\mu}{2}k_1AH \qquad A_{20} = -H-\frac{1}{2}H^2-\frac{1-\mu}{2}\,k_1AH$$

$$A_{21} = 1+H+k_1A+\frac{3}{2}H^2-\frac{\mu}{2}H^2-\frac{\mu}{2}k_1AH \qquad A_{24} = -7-H-k_1A$$

$$A_{22} = -2H-2k_1A-\mu k_1AH^2+(3-\mu)H^3 \qquad A_{25} = 12+4H+4k_1A-H^2+\frac{\mu}{2}k_1AH$$

$$A_{23} = -1+H+k_1A-\frac{3}{2}H^2+\frac{\mu}{2}H^2+\frac{\mu}{2}k_1AH \qquad A_{26} = -9-5H-5k_1A+4H^2-2\mu k_1AH$$

$$A_{27} = \frac{5}{2}+2H+2k_1A-3H^2+\frac{3}{2}\mu k_1AH-\mu k_1AH^2+2H^3 \qquad A_{28} = H$$

$$A_{29} = -4H-\frac{1}{2}H^2-\frac{1-\mu}{2}k_1AH \qquad A_{30} = 5H+2H^2+2(1-\mu)k_1AH$$

$$A_{31} = -2H-\frac{3}{2}H^2-\frac{3}{2}(1-\mu)k_1AH+(1-\mu)k_1AH^2+H^3$$

$$A_{32} = -\frac{5}{2}+2H+2k_1A+3H^2-\frac{3}{2}\mu k_1AH-\mu k_1AH^2+2H^3$$

$$A_{33} = 9-5H-5k_1A-4H^2+2\mu k_1AH \qquad A_{34} = -12+4H+4k_1A+H^2-\frac{\mu}{2}k_1AH$$

$$A_{35} = 7-H-k_1A \qquad A_{36} = -2H+\tfrac{3}{2}H^2+\tfrac{3}{2}(1-\mu)k_1AH+(1-\mu)k_1AH^2+H^3$$

$$A_{37} = 5H-2H^2-2\,(1-\mu)\,k_1\,AH \qquad A_{38} = -4H+\tfrac{1}{2}H^2+\frac{1-\mu}{2}\,k_1\,AH$$

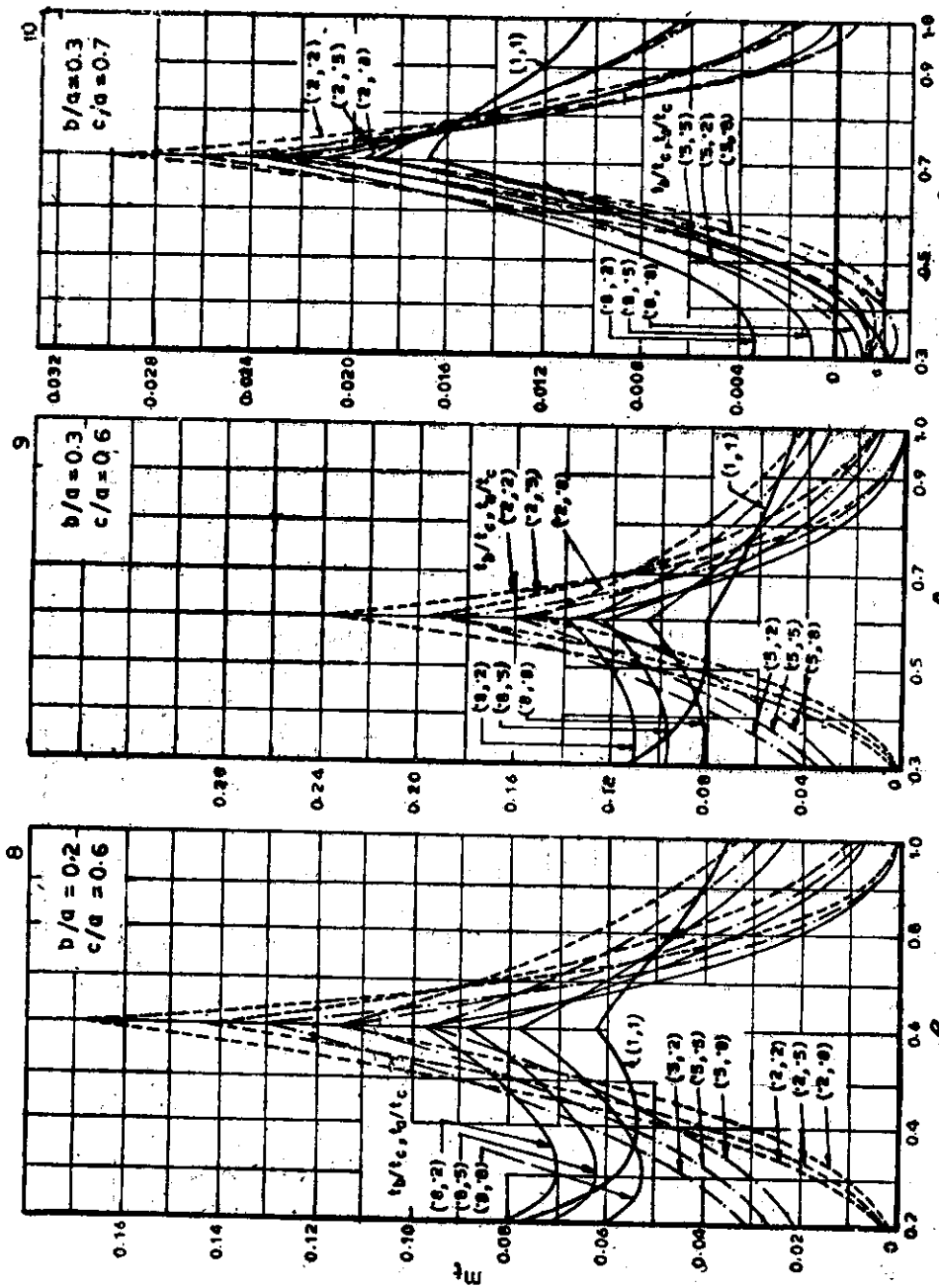

Figs. 8–10—Distribution of circumferential moments in annular plates due to symmetrical loading

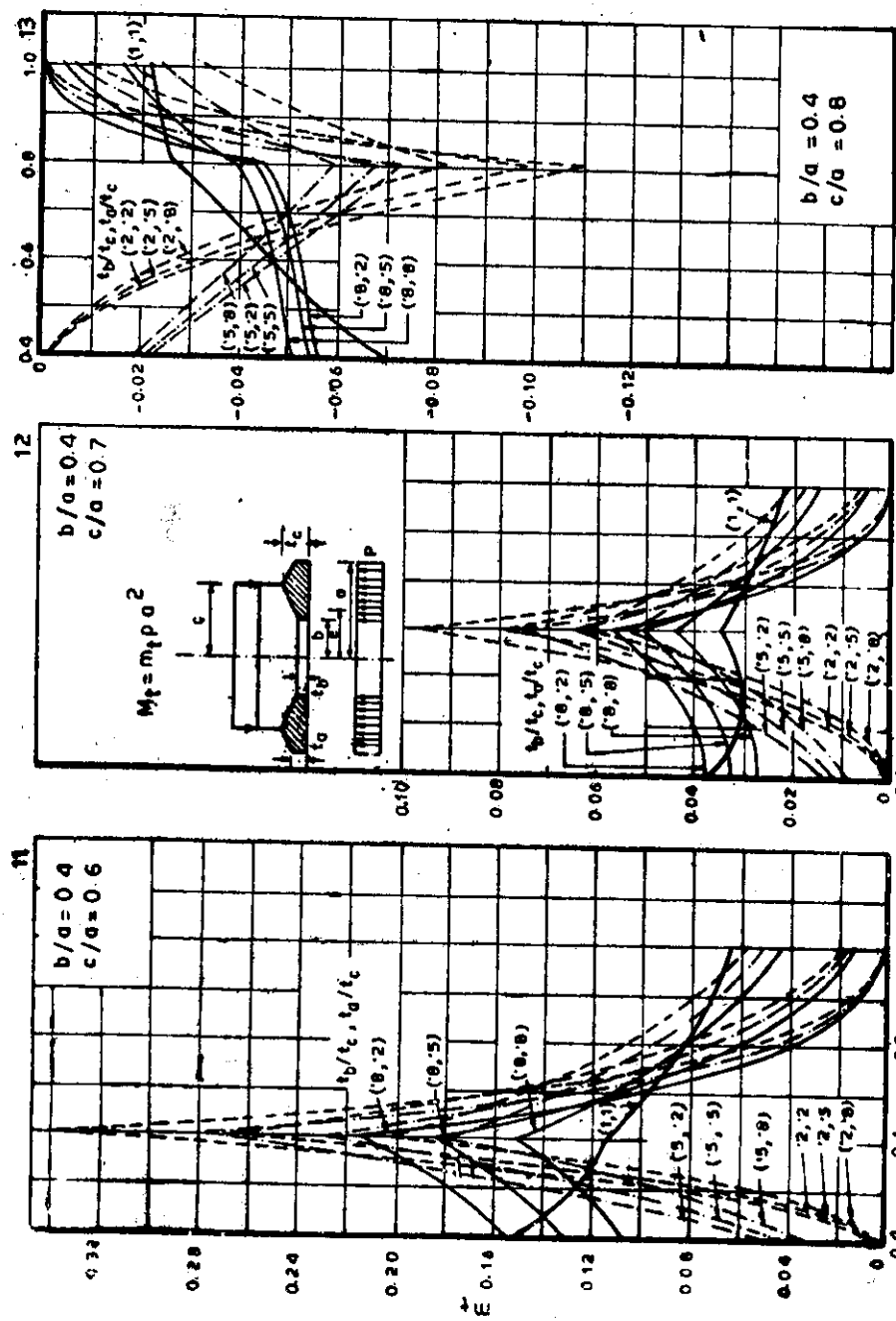

Fig. 11-13—Distribution of circumferential moments in annular plates due to symmetrical loading

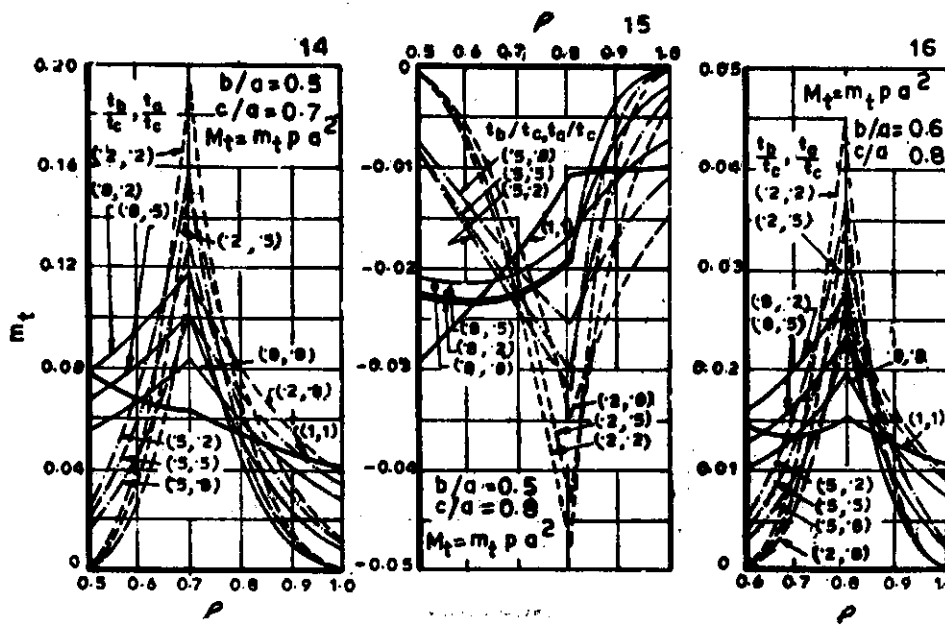

Figs. 14–16—Distribution of circumferential moments in annular plates due to symmetrical loading

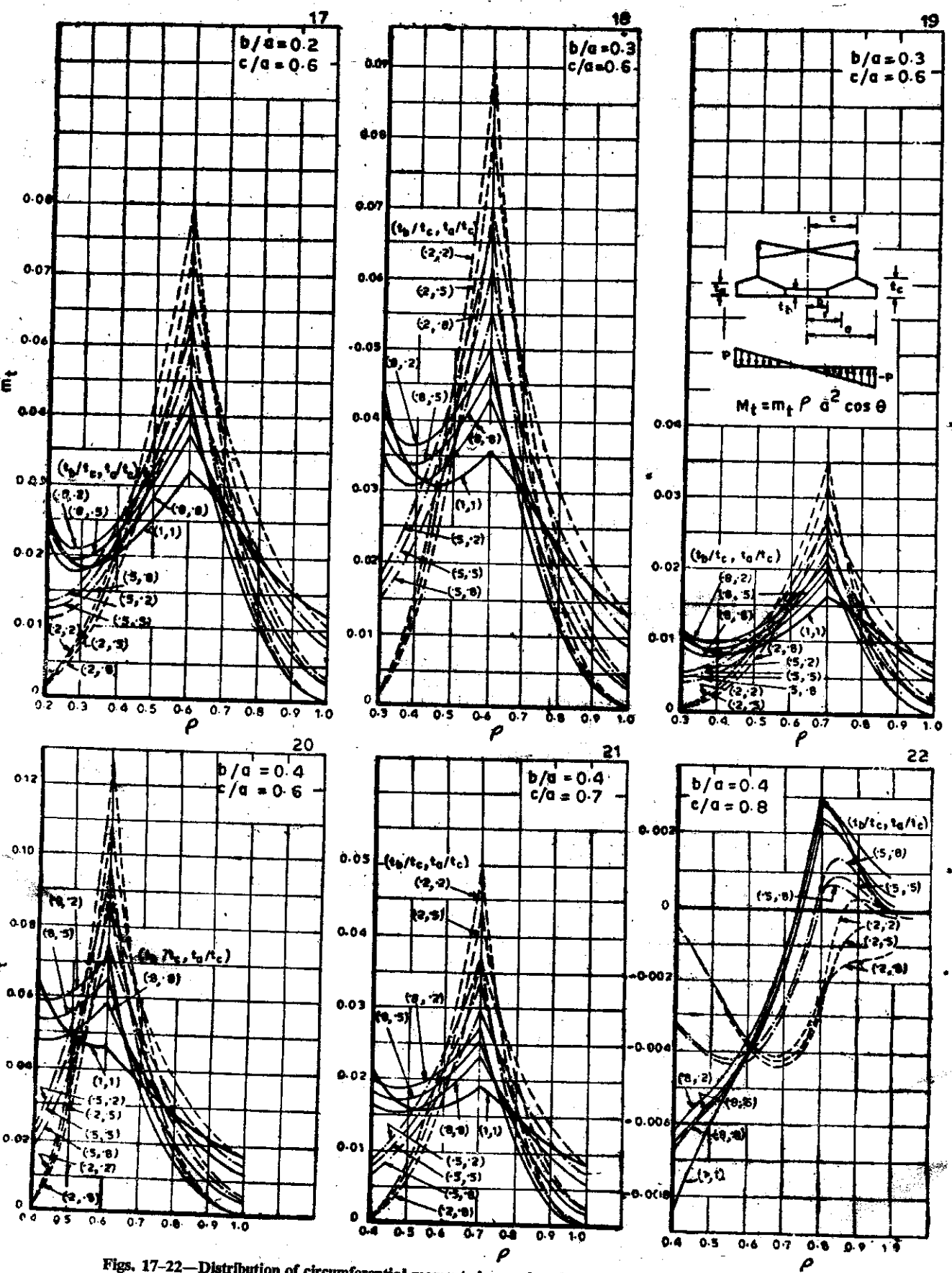

Figs. 17–22—Distribution of circumferential moments in annular plates due to antisymmetrical loading

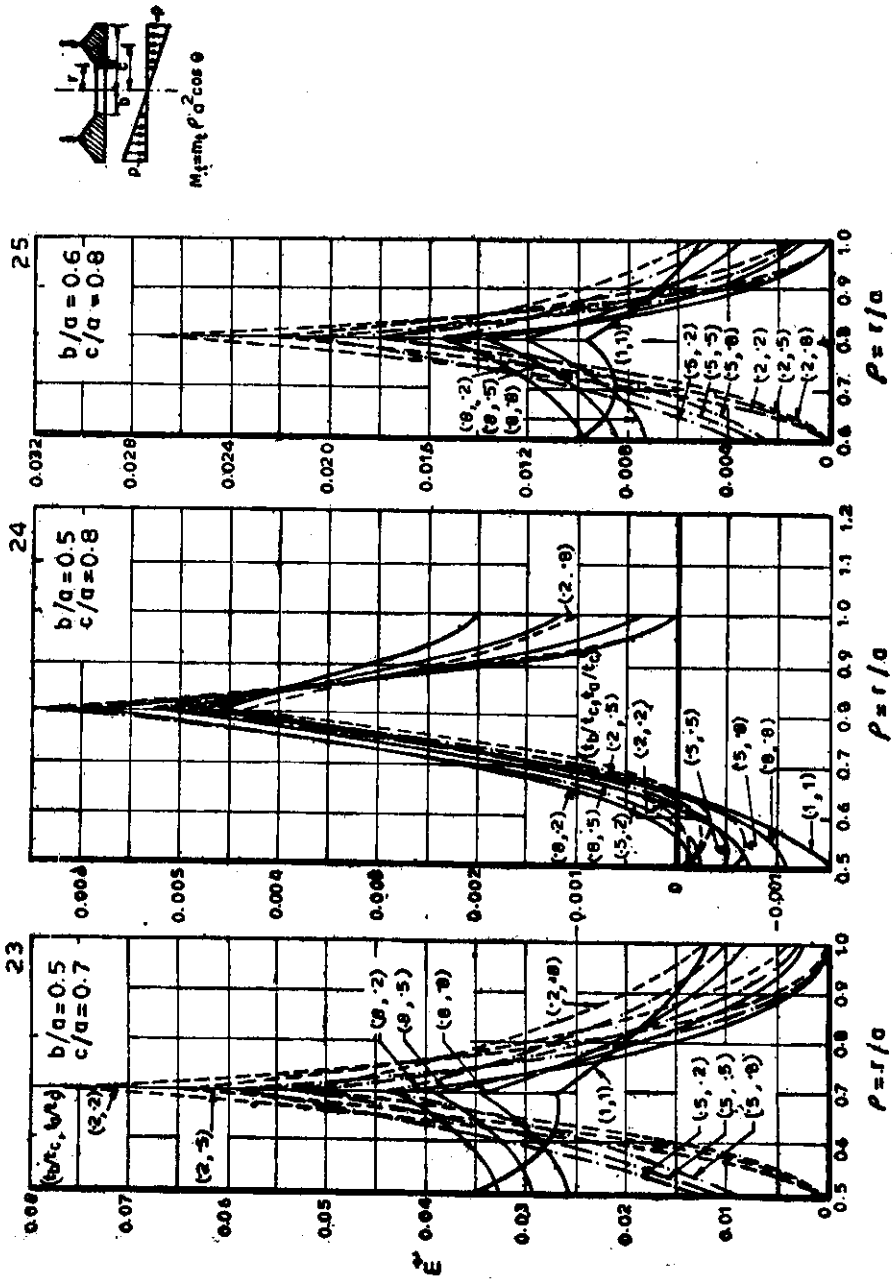

Figs. 23-25—Distribution of circumferential moments in annular plates due to antisymmetrical loading

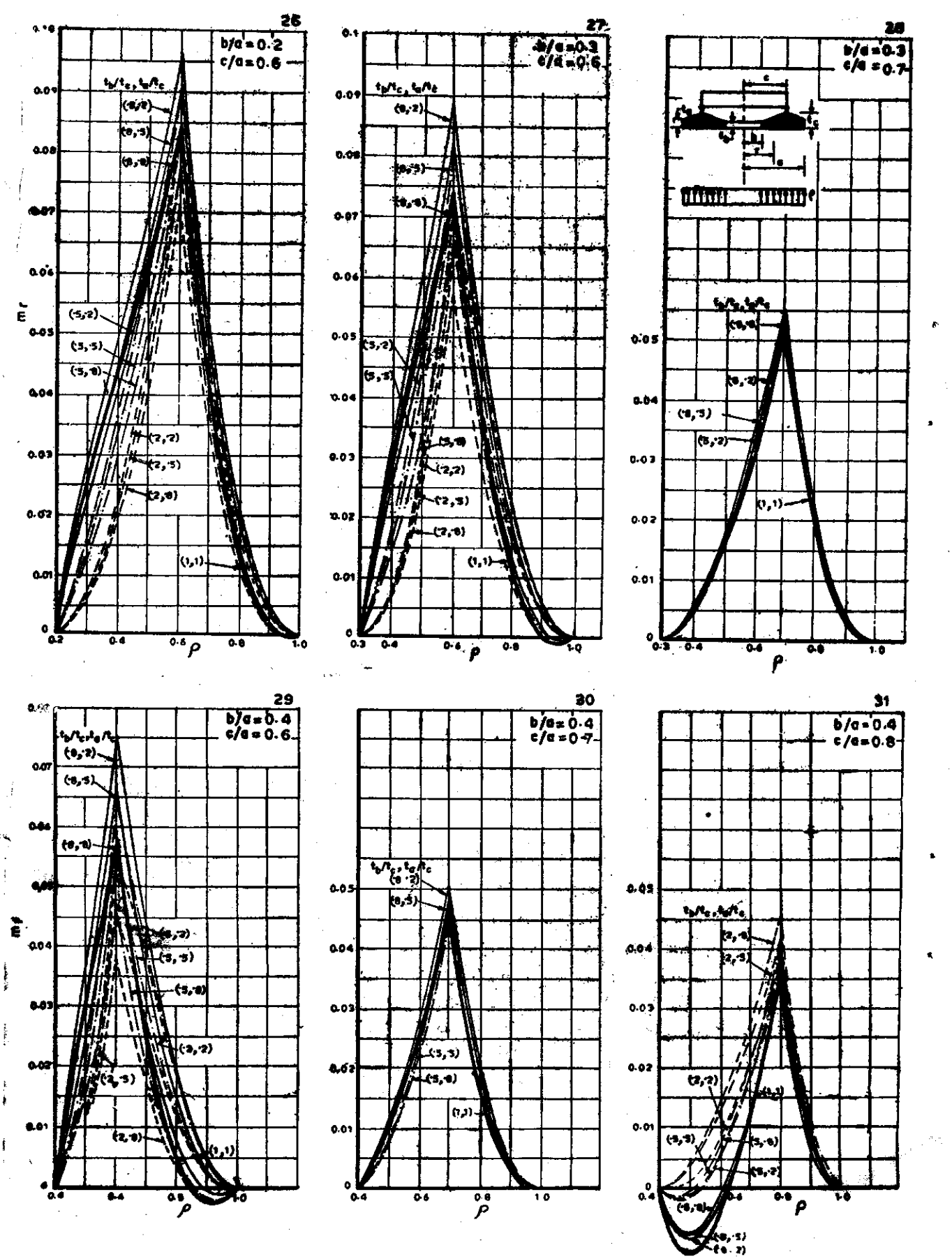

Fig. 26–31—Radial bending moment coefficients for annular plates due to symmetrical loading

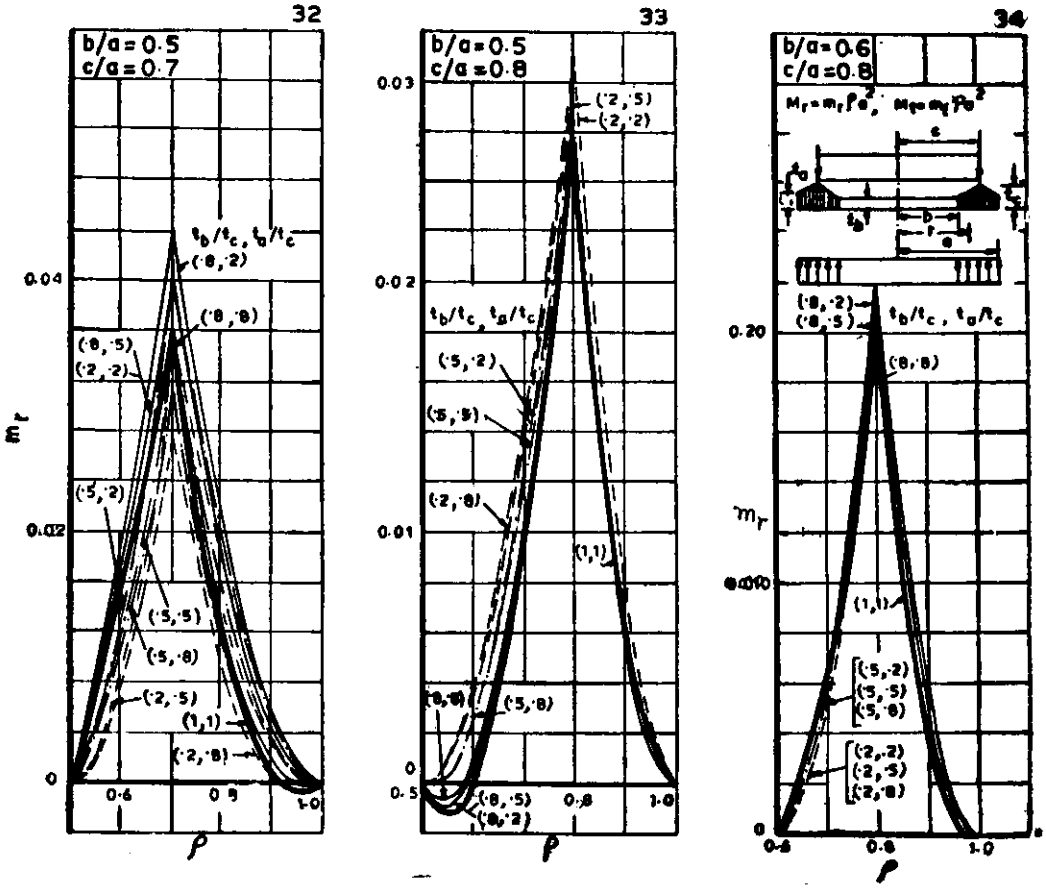

Figs. 32–34—Radial bending moment coeff. for annular plates due to symmetrical loading

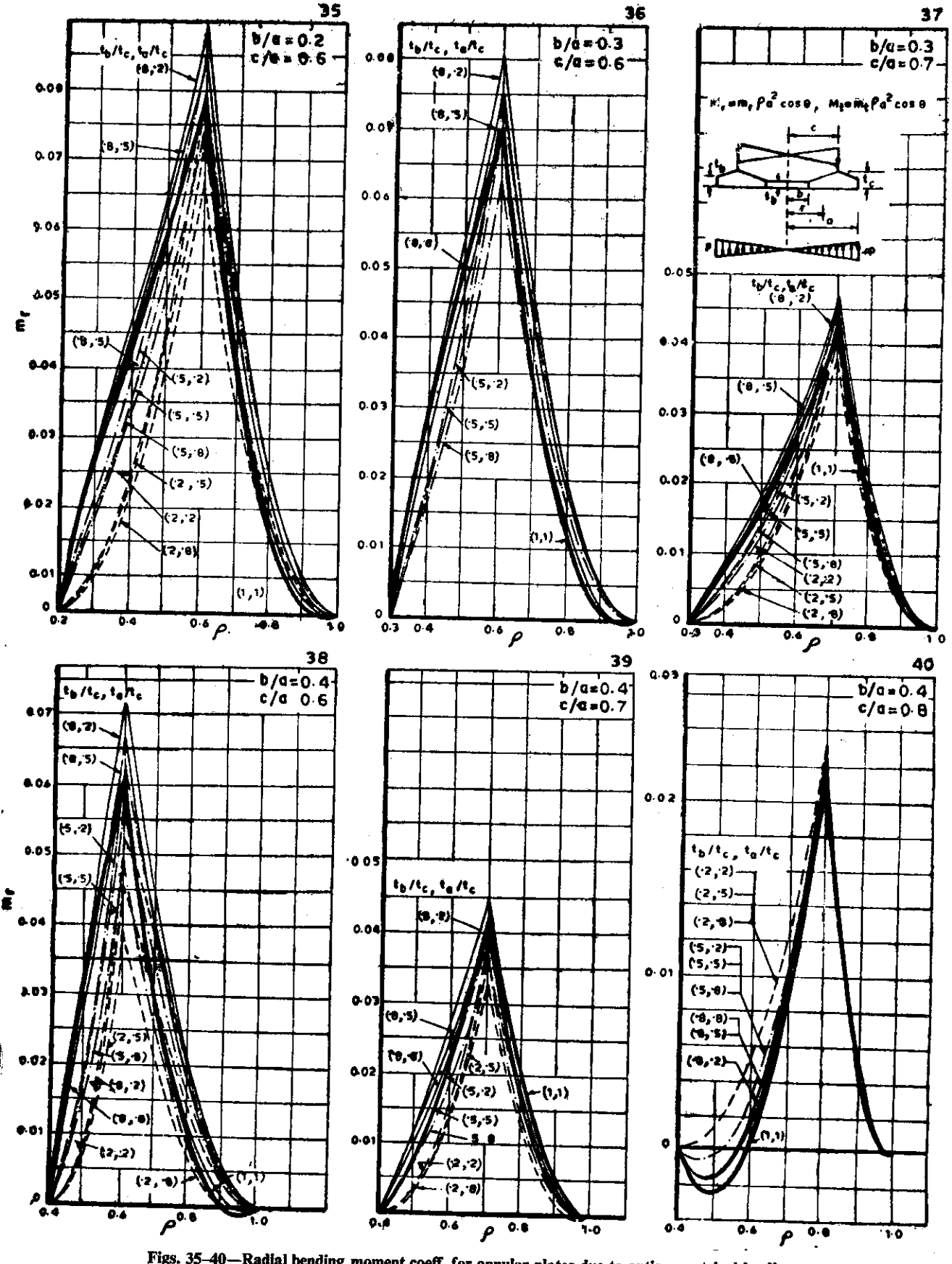

Figs. 35–40—Radial bending moment coeff. for annular plates due to antisymmetrical loading

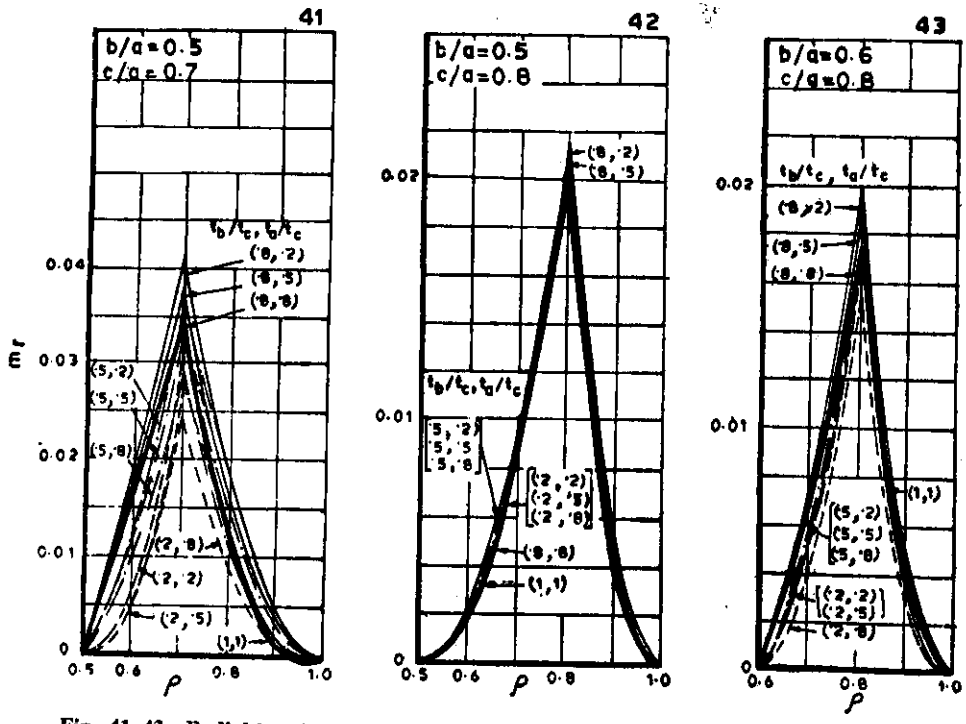

Fig. 41–43—Radial bending moment coeff. for annular plates due to symmetrical loading

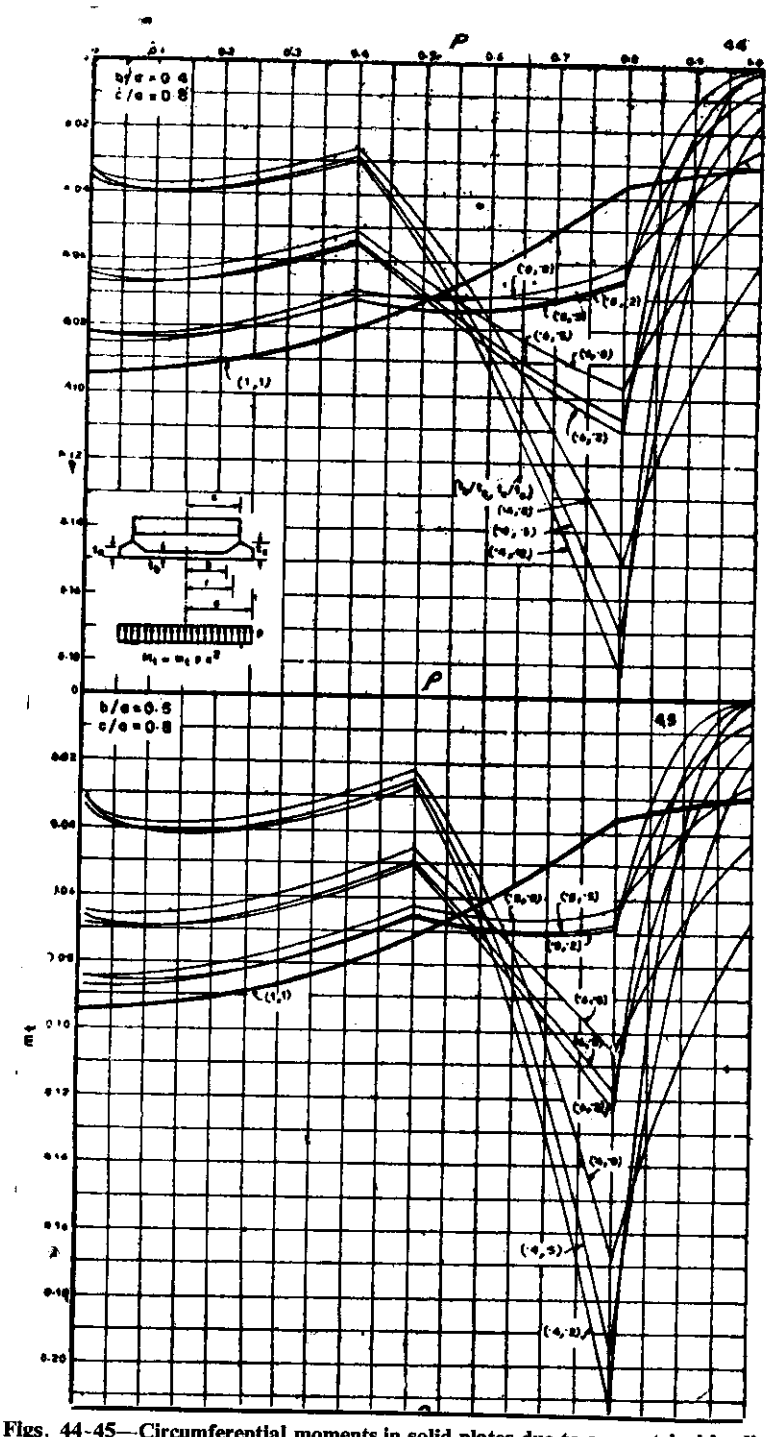

Figs. 44-45—Circumferential moments in solid plates due to symmetrical loading

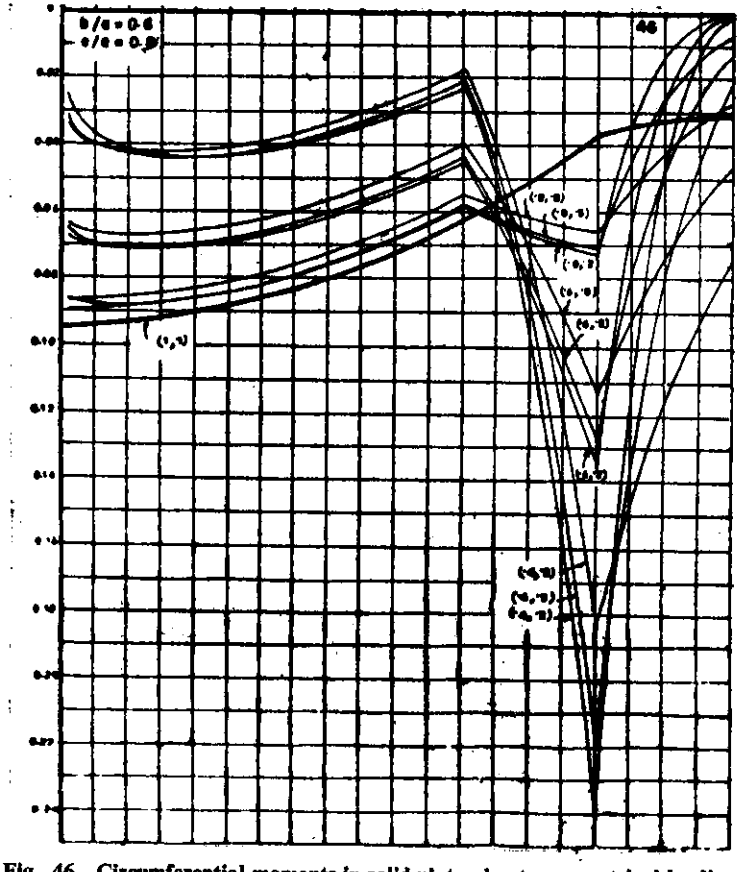

Fig. 46 – Circumferential moments in solid plates due to symmetrical loading

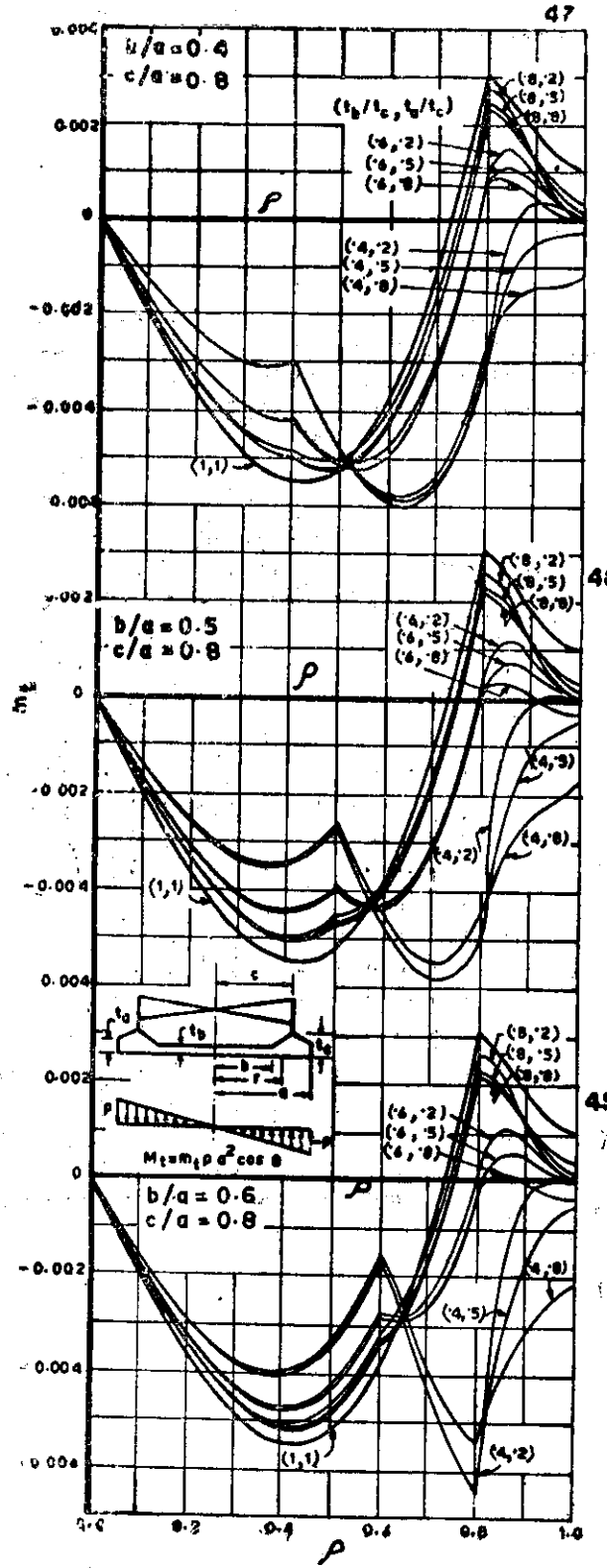

Figs. 47–49—Circumferential moments in solid plates due to antisymmetrical loading

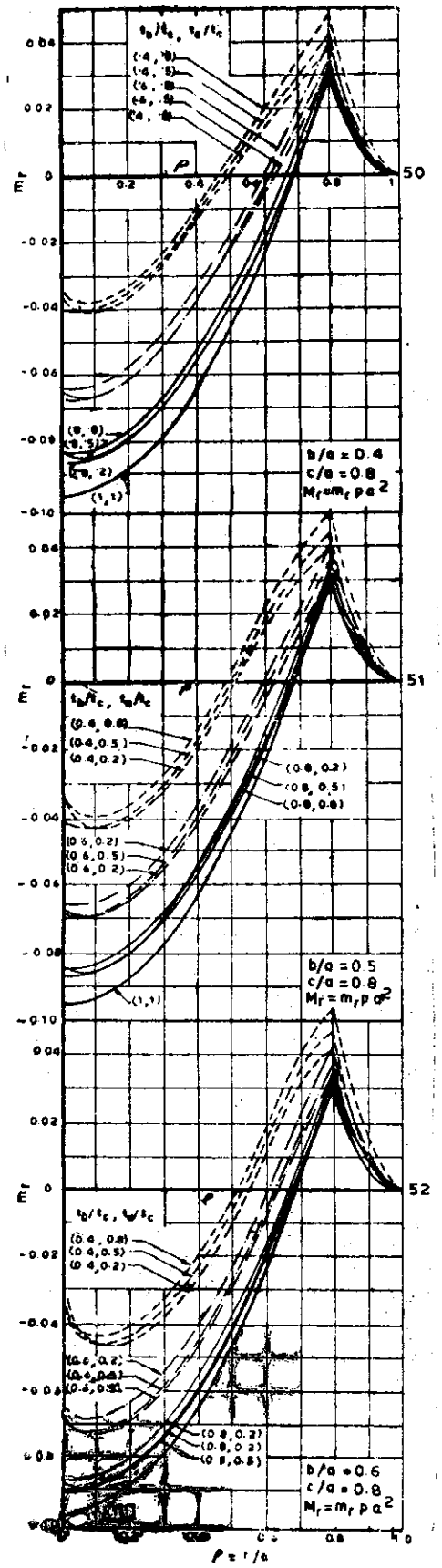

Figs. 50–52—Radial moments in solid plates due to symmetrical loading

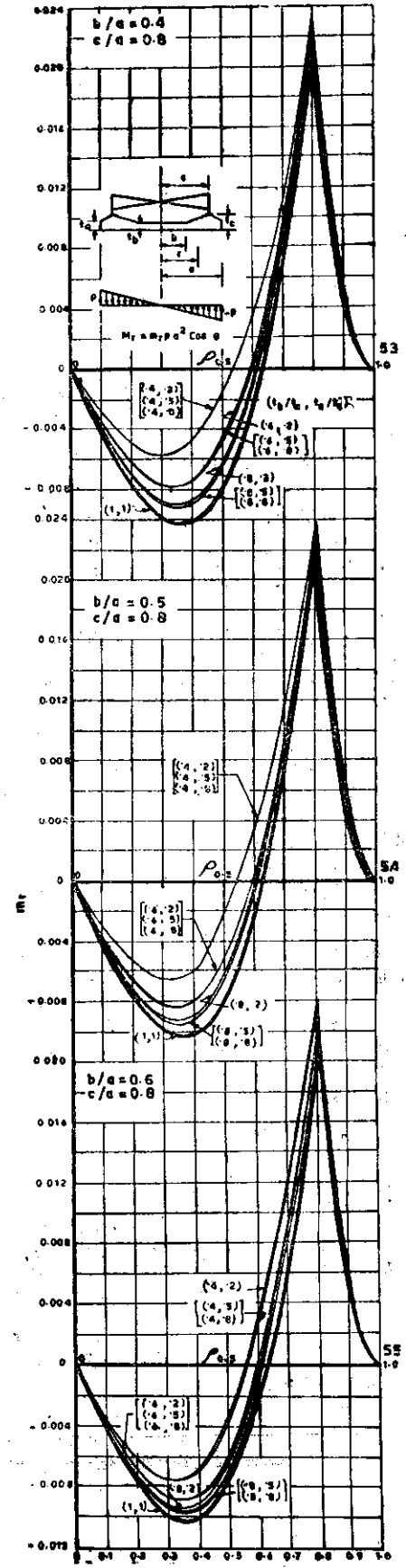

Figs. 53–55—Radial moments in solid plates due to antisymmetrical loading