ISET Journal of Earthquake Technology, Paper No. 410. Vol. 38, No. 1, March 2001, pp. 31-55

SLOW CYCLIC TESTING FOR EVALUATION OF SEISMIC PERFORMANCE OF STRUCTURAL COMPONENTS

Durgesh C. Rai
Assistant Professor
Department of Earthquake Engineering
University of Roorkee, Roorkee - 247 667

ABSTRACT

Slow cyclic testing will continue to be used for its simplicity, affordability and, more importantly, for its versatility. This simplified technique provides a consistent and reliable set of experimental data on strength, stiffness, energy dissipation potential, and failure mode which help assess a structure's ability to resist earthquake loads. The majority of design equations and procedures included in various codes throughout the world have their basis in databases generated through this experimental technique. Careful planning of the entire test program is essential for obtaining meaningful results, which includes fabrication of test specimen, test structure assembly, load application system, loading history, instrumentation, data acquisition, reduction, analysis, and presentation. If the simulation of proper boundary effects, initial conditions, scale effects, etc., are not addressed in sufficient detail, it may be difficult, or impossible, to interpret the test results. Finally, the amount of experimental earthquake engineering research in India is meagre, despite the fact that many indigenous structural systems for housing needs and many construction practices have been repeatedly shown to be vulnerable in earthquakes. In addition, many widely used construction features are likely to have questionable performance, due to the lack of any experimental verification. This is why it is important for India to establish many relatively inexpensive, slow cyclic testing facilities to bridge the gap between the "expected" and the "observed" behaviour.

KEYWORDS: Quasi-Static Testing, Slow Cyclic Loads, Seismic Testing

INTRODUCTION

Slow cyclic tests (often referred to as "Quasi-Static tests") have been used extensively in earthquake engineering research to understand overall behaviour and to quantify the strength and stiffness parameters of various structural components under the influence of earthquake-type induced excitations. Much of the experimental data upon which the design procedures of earthquake-resistant structures are based come from this simple testing technique. In the beginning, the hardware used in test setups were crude with their capacities seriously limited, but now, with the advances in loading apparatus (e.g., servo-hydraulic actuators), the advent of digital controls, the development of highly reliable and precision transducers, and with data logging and reduction in real time, the field of slow cycling testing has opened up many possibilities.

However, this simple technique ignores many dynamic effects in its loading program, which are usually observed in structures subjected to earthquake loads. Furthermore, the improper simulation of proper boundary effects, initial conditions, scale effects, etc., may make the interpretation of the test results not only difficult, but useless. A careful planning of the entire test program is essential to obtaining meaningful results, beginning with experimental setup, test structure assembly, reaction frames, loading history, instrumentation, data acquisition, analysis, and the presentation of data.

Finally, the quantity of experimental earthquake engineering research in India is meager by any standard, considering the overall earthquake problem which this country faces. Many indigenous structural systems for housing needs, as well as poor construction practices, have been repeatedly shown to be vulnerable in recent earthquakes. Various widely-used construction features are likely to have questionable performance as well, due to the lack of any experimental verification. For these reasons, it is very important to establish slow cyclic testing facilities to bridge the gap between the "expected" and the "observed" behaviour. In recent years, a few such facilities have been developed at educational institutes and national laboratories, but they have not been well-equipped to produce results that are meaningful and whose integrity is not compromised.

The objective of this paper is to discuss the key issues involved in cyclic testing of structural components for the experimental evaluation of seismic performance. These issues will be illustrated with two test programs aimed at evaluating (1) the performance of shear yielding aluminium link for seismic energy dissipation, and (2) the performance of a seismic strengthening scheme of rocking-critical piers with steel bracing elements. The paper also presents guidelines to establish a slow cyclic test facility of moderate capacity.

PURPOSE OF SLOW CYCLIC TESTS

The primary objectives of structural testing are to determine (1) the demand imposed by a set of loads and (2) the capacity of a structural system. The demand and capacity quantities are related, and they cannot be determined in isolation of each other. It is a very important aspect of structural behaviour, which plays a vital role in the design of a testing program to assess the performance of a structure or its components. For example, earthquake loads are caused by inertial forces due to the mass of the structure when accelerated during ground shaking, usually for a brief period of time. The dynamics of the structure imply that the seismic forces, which the structure is supposed to resist, depend on the characteristics of the structure itself. Simulating earthquake loads in a laboratory is a complex process requiring sophisticated hardware, such as shake tables of various sizes and capabilities, and robust and precise controls for distortion-free reproduction of ground motions.

Conventionally designed (fixed-based) structures, derive their earthquake resistance from their ability to absorb seismic energy in specially designed regions of the structures, such as in beams near beam-column joints of RC frames. These regions should be capable of deforming into the inelastic range and sustaining large reversible cycles of plastic deformation, all without losing strength and stiffness to a level where it would jeopardize the stability and integrity of the structure. Slow cyclic tests have been observed to provide a reliable and consistent estimate of these properties. The designs based on the information collected from such tests have been shown to deliver satisfactory response in many earthquakes. Slow cyclic load tests are now being specified in building codes as a standard testing program to evaluate the performance and to characterize many energy-dissipating and base-isolation devices that are being developed and used for earthquake resistance (BSSC, 1994).

Further, experimental methods simplify loading environments and structural components and use only small number of specimens in an investigation. Leon and Deierlein (1996) have pointed out that primarily due to economic constraints, seismic experimental investigations rarely meet three basic requisites of a good experiment, i.e., replication, randomization and blocking (Montgomery, 1991). Experimental methods need to be supplemented with rigorous analytical investigations to satisfy these basic requirements of a research program. In such cases, the objective of experiments becomes to provide an understanding of the physical phenomena and data which can be used to develop analytical tools and/or verify analytical predictions.

KEY ISSUES AFFECTING SLOW CYCLIC TESTS

Conducting successful slow cyclic tests on structural components and proper interpretation of test results requires careful consideration of factors which arise primarily from the limitations of the testing methodology and other assumptions made in fabricating the specimen and designing the test rig. The factors which have significant influence on test results are loading histories employed in the test, boundary and initial conditions reproduced in the test rig, size effects due to scaled modeling of specimen and strain rate effects which are neglected in slow cyclic tests.

1. Loading History

The loading history to be used in slow cyclic tests is one of the most important points. Researchers in the past have used many different loading schemes for such tests: it varies from simple reverse cycles of load/displacement of increasing amplitude, to more complex patterns derived from time history analysis of a mathematical model of the structure. The choice of a loading scheme is largely guided by the objective of the testing. If the objective is to obtain information on parameters that describe the cyclic load-deformation behaviour and failure mechanism, then a simple multiple-step loading program is adequate (Krawinkler, 1996). On the other hand, if the objective is to verify analytical results and/or to evaluate the performance of a structure for a given ground motion, researchers have developed loading schemes specific to the problems (Goel and Itani, 1991; Basha and Goel, 1994; Derecho et al., 1980).

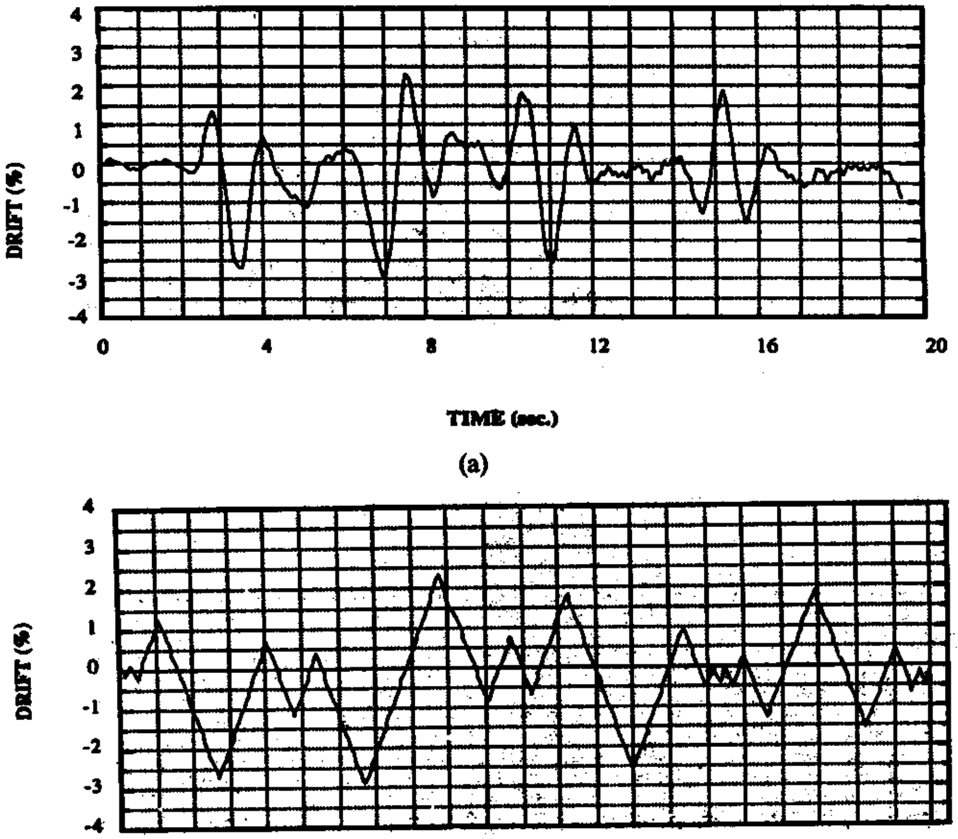

(a)

(b)

Fig. 1 (a) Relative displacement history of a storey, (b) The derived loading history for slow cyclic test (Basha and Goel, 1994)

This choice of loading scheme (obtained from analysis) is guided largely by the desire to apply the same displacement history as anticipated during an earthquake. In this method, lateral displacement histories, at points corresponding to loading points of the test specimen, are obtained from the analytical model of the structure under a chosen earthquake ground motion. Figure 1(a) shows a storey displacement history obtained from an inelastic dynamic analysis of a truss moment frame building during the Miyagi-ken-Oki ground motion, which is used to derive a displacement loading history as shown in Figure 1(b) for the slow cyclic testing of the test specimen modeling of that particular story (Basha and Goel, 1994). The loading histories thus arrived at are usually characterized by large amplitude cycles in the initial portion of the test. The presence of large cycle amplitudes can cause early deterioration of the specimen. Further, the derived loading program may have unsymmetric and not fully reversed loading cycles due to the effect of gravity loads and widespread inelastic activity.

Derecho et al. (1980) carried out an extensive study involving inelastic dynamic analyses of isolated RC structural walls, with the objective to specify a loading program for a slow cyclic test to simulate earthquake loading. They found that six fully reversed cycles of large amplitude and a maximum of ten inelastic cycles can be reasonably expected in 20 seconds of strong motion. This study also found that, in many cases, the first maximum deformation (or a deformation close to the maximum) occurs early in the response, with almost no inelastic excursion preceding it. The suggested loading program has one small inelastic cycle preceding the maximum deformation cycle as shown in Figure 2. Smaller inelastic cycles of peak equal to 1.5 to 2 times the yield value occur in between maximum deformation cycles. The amplitude of maximum deformation depends on intensity of earthquake, yield level and the period of the structure.

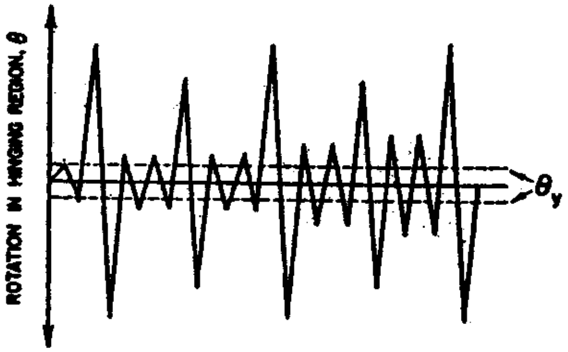

Fig. 2 Recommended loading history for isolated shear walls (Derecho et al., 1980)

2. ATC-24 Guidelines

The ATC-24 (ATC, 1992) report prepared by Krawinkler addresses the issue of loading schemes in greater detail, with particular reference to the testing of steel structure sub-assemblages. Many conclusions of this study can be extended to other structural materials, such as RC and masonry. The guidelines developed for loading history are based on a general concept of cumulative damage of structural components under reversed cyclic loads. According to this concept, every inelastic excursion accrues damage in a component, and the contributions of large excursions are much larger than small excursions. Further, the relative amount of damage caused by an inelastic excursion is largest for the symmetric excursion and depends on the sequence in which large and small excursions are applied. However, it is not known with certainty how sequence effects influence the cumulative damage and, moreover, no consistent pattern of large and small excursions are observed in a structural response due to severe earthquake motions. The reverse history, i.e., large cycles followed by small cycles, may lead to accelerated deterioration, and this problem is recognized in masonry structures where rapid degradation of strength and stiffness is highly likely. TCCMAR (1987) masonry research program used a sequential-phased displacement loading history as shown in Figure 3, which includes "decay" cycles in addition to "peak" cycles. However, for slow and gradually deteriorating specimens, the sequence effects have not been noticed. As a result of this lack of adequate understanding, ATC-24 guidelines neglect the sequence effects, and only the number of symmetric inelastic excursions, their deformation amplitudes, and the sum of plastic deformation ranges become the primary parameters for specifying loading histories.

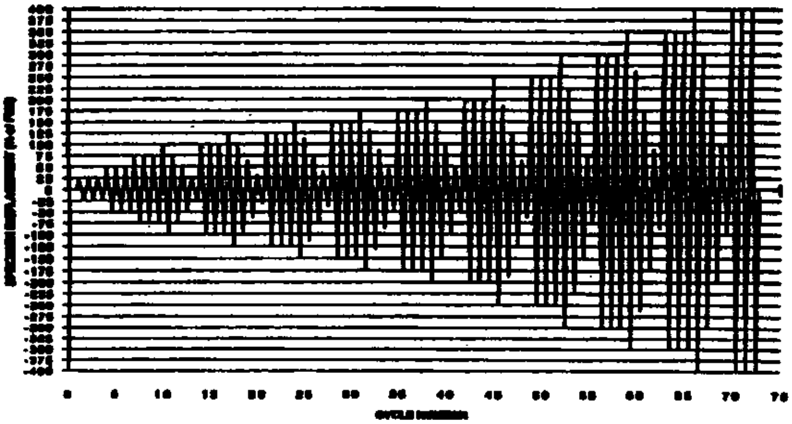

Fig. 3 Sequential-phased displacement loading history recommended for TCCMAR research program

These guidelines further include the purpose of the experiment (i.e., seismic performance assessment versus development of a damage model), expected failure mode, and the rate of deterioration of seismic capacities (i.e., ductile and slow rate of deterioration versus brittle and rapid rate of deterioration) and the number of specimens (i.e., single versus multiple) planned for the testing program. If the purpose of the test program is to assess the seismic performance of a component, then a multiple-step loading history which consists of symmetric cycles of increasing amplitude in predetermined steps, as shown in Figure 4 is adequate. The loading history is recommended for a testing program when the monotonic behaviour of test specimen can be predicted with confidence, or when at least the yield strength is known, the rate of strength degradation is slow, or the force/deformation level at which rapid degradation commences is known. This simple multiple-step test maximizes the information that can be obtained from the single specimen testing. Moreover, it permits the evaluation of cyclic softening, cumulative damage aspect, strength and stiffness deterioration, and facilitates mathematical modeling and a consistent comparison of test results. It should also be noted that cyclic demands on a structure depend on many factors, so that a unique loading history will always be a compromise.

The recommended loading history begins with six cycles in the elastic range which are large enough to obtain reliable estimates of stiffness properties. The suggested maximum forces are 50% and 75% of the yield force or deformation. These elastic cycles are generally performed in the load control mode of the loading device. The loading is switched to displacement control mode after "yielding" or the occurrence of "first major event (FME)" which can be defined as when significant departure from elastic behaviour is noticed. Three cycles are performed for the next three steps of loading, and the increase in the amplitude of deformation at each step depends on the anticipated deformation demand. However, for building structures and their components, this increase should correspond to a unit increase in the storey drift ductility ratio. Further loading consists of two cycles at each step, until the maximum deformation expected during an earthquake is reached. In the case of a performance evaluation test, the maximum deformation will be a variable to be determined during the test. Small amplitude cycles of about 75% of yield value should be performed at the end of each step for the evaluation of stiffness degradation. In some cases, vibration measurement can be used to find a decrease in frequency due to the accumulated damage and reduced stiffness. Krawinkler (1996) further showed that demands imposed by the recommended multiple-step loading program is representative of demands computed for a number of ground motions for bi-linear single-degree-of-freedom systems of three selected periods 0.2, 0.5 and 2.0 s, and for ductility ratios ranging from 2 to 8.

The ATC-24 document provides a comprehensive and rational method of choosing a loading history for cyclic load tests in order to develop a cumulative damage model for assessing the seismic performance of a component under arbitrary loading. The methodology presented is very general and can be applied to structural components of any material and behaviour type. Though it is clear that there exists a broad consensus on the description of loading history for cyclic tests, it would be difficult, as well as unnecessary, to "standardize" the loading history, considering differences in the purpose of a testing program and differences in structural components and materials.

3. Boundary Conditions

Quite often, it is not economically feasible to model a complete structure due to the high cost of loading equipment, associated reaction frames, test specimen fabrication, preparation etc. Moreover, testing of a complete structure is not necessary when one is interested in the localized behaviour of certain key elements of a structural system. Practically all structures are three-dimensional, however, the assumption of planar structures is commonplace in structural engineering analysis and design purposes, solely for reducing the problem size. This assumption is justified only for those portions of structures which behave substantially in 2-D stress conditions under the maximum loading conditions. This assumption, when extended to structural models, requires full restraint of out-of-plane movements of the test specimen, so that the lines of all forces acting on the structure should remain in a plane. The forces required to restrict out-of-plane movements can be substantial, and the restraining system (including the reaction supports) should be carefully designed. To eliminate and/or reduce this problem significantly, specimens are sometimes tested in "rigidly" connected pairs (e.g., in-plane loading of walls connected by a rigid slab) or tested with the specimen in a horizontal plane, lying on the reaction floor for adequate restraint instead of being in the usual upright position.

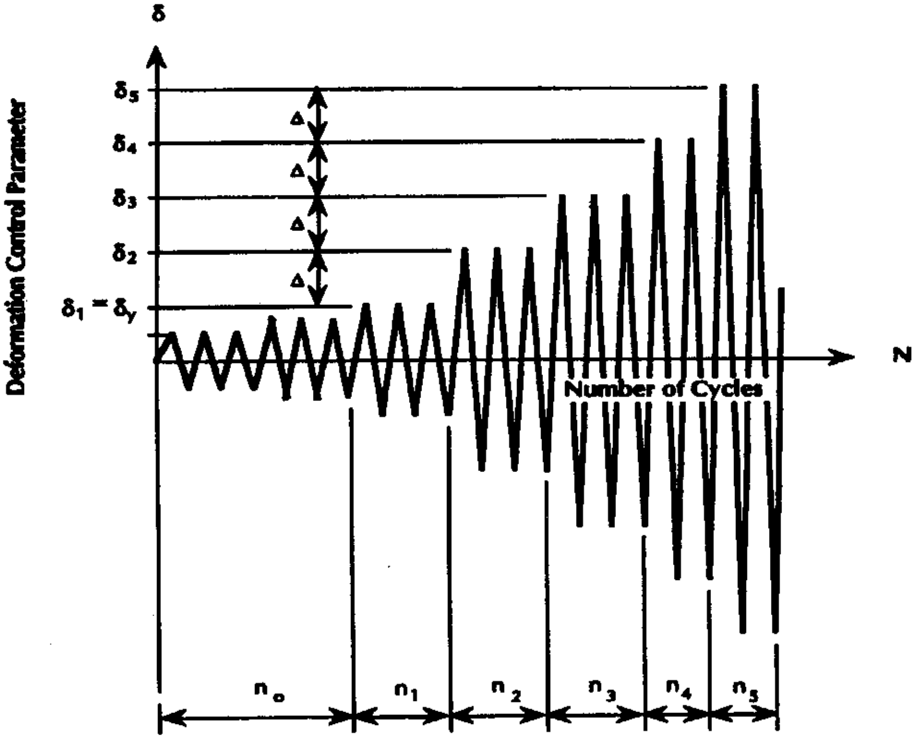

Fig. 4 ATC-24 loading history for multiple-step test

Major difficulty is encountered in the simulation of proper boundary conditions of sub-assemblages from the interiors of the complete structure. The sub-assemblages are further simplified so that they are statically determinate, and many force and deformation quantities are directly measured. Secondary effects of structural as well as non-structural components are ignored. An inadequate simulation of these boundary conditions in a physical model may result in completely false behaviour. Therefore, careful detailing of the constraints imposed at these boundaries is an absolute requirement for the successful modeling of the physical domain of the problem. For example, systematic errors will be introduced due to a support that offers a moment restraint when a hinge is desired. Similarly, erroneous force and deformation effects are introduced when the slippage of a test specimen is not fully eliminated, where no movement is desired due to the yielding of connectors, friction, misfits, etc.

In most of the cyclic load test setup, the load application system is such that the various internal actions (such as moment, shear, and axial force as well as the corresponding deformations) are usually in-phase due to the fixed load application points and the proportional increase of loads. However, inelastic dynamic analyses indicate that under earthquake type loads, these force and deformation quantities are rarely in-phase. It is believed that in-phase presence of these internal forces in cyclic load setups results in a more severe loading condition (Derecho et al., 1980). This effect needs to be studied further.

4. Initial Conditions

Initial conditions generally refer to force and deformation conditions present in the structure at the time of the occurrence of lateral loads. The effect of gravity loads is nearly always present and needs to be properly simulated in the test specimen before applying cyclic lateral loads. However, in some studies, the effects of gravity loads are ignored, either because of the difficulty and complexity of the loading system, or because the effect of gravity loads are negligible. In either case, a sensitivity analysis should be made so that the influence of the ignored effects is intelligently accounted for while interpreting test results.

5. Reduced Scales

In general, slow cyclic tests are performed on prototype size specimens or large-scaled models (full structure or sub-assemblages), which is one of the strengths of this testing technique over shake table tests where full size specimens are rarely tested. However, in order to reduce time and expense and to accommodate specimens within limited laboratory facilities, it becomes necessary at times to conduct experiments on the structures at a reduced scale. Many studies have shown that for medium scale models (i.e., up to geometric scale ratio of 1:4), it is possible to obtain good to excellent predictions of prototypical force-deformation response (Sabnis et al., 1983). Reinforced concrete models, when fabricated in accordance with similitude laws, faithfully reproduced an overall pattern of cracking as observed in prototypes. However, it was difficult to simulate the number and the width of cracks and other phenomena which were directly affected by the bond characteristics at small scales. The author has used half-scale (1:2) models for masonry and reinforced concrete structures and even quarter-scale (1:4) models for aluminium links (Rai and Wallace, 1998) and found that the force-deformation and stress-strain behaviour showed no noticeable distortion due to *size effects*, i.e., the observed quantities were directly scaleable. Half-scale models of large structures using prototypical materials are used in other studies as well with excellent results (Chien and Wight, 1994; Masri and Goel, 1996). However, many structural problems are sensitive to size effects, for example, the structural details of joints, bolts, shear studs, welds, etc. do not follow similitude laws and should be tested in full size (post-Northridge experience in steel moment connections is one such example).

6. Strain Rates

The effect of strain rates on material behaviour is well established and can be significant under earthquake type loads for certain materials and structures. In general, high strain rates lead to higher strengths, and in metals, they tend to increase the yield stress significantly, although the ultimate strength increases slightly (Krawinkler, 1988). Similar observations were made for the shear behaviour of aluminium links at various cycling frequencies (Rai and Wallace, 1998). Changing cycling frequency from 0.01 Hz (slow) to a maximum of 17 Hz increased the peak stress to a maximum of 13%, and a similar trend was observed at all strain amplitudes. The overall behaviour — including the onset of buckling, buckle formation, rate of strength deterioration, and shear mode of failure — appeared indifferent to strain rate. However, the fracture at flange welds appeared to worsen for higher strain rates. Similarly, brittle materials such as masonry and concrete are relatively more susceptible to strain-rate effects. The behaviour of masonry has been observed to be affected by the rate of loading due to its effect on crack propagation (Abrams, 1996; Paulson and Abrams, 1990).

In slow cyclic load tests, the effect of strain rates is neglected and the above discussion implies that it may lead to incorrect interpretations of results in cases where accurate estimates of over-strength is required and when either the material is brittle or the governing failure mode is brittle. This apparent shortcoming, on the other hand, gives rise to many of its unique strengths. Eliminating strain rate effects provides a consistent basis for better comparison of experimental data from different sources (Leon and Deierlein, 1996). The slow rate of testing permits careful observation and identification of various stages of load-deformation behaviour, such as the onset and propagation of cracking, yielding, buckling and the spread of inelasticity in different regions of the test specimen with increasing load/deformation, and finally the fracture or collapse at the ultimate loads. This information is vital for proper understanding and development of an analytical force-deformation (hysteretic) model.

The question that comes up very frequently in slow cyclic tests is: how slow is slow enough? In typical tests, lateral loads are applied incrementally, with a pause in testing for making visual observations and taking notes, before the next step of load is applied. This "stop and go" procedure appears to be a fairly common practice for slow cycle tests. The loading can be held up for several minutes for marking cracks, taking photographs, and even video-recording for proper documentation. Usually displacement (i.e., actuator's head movement) is locked while the load is allowed to relax. This relaxation (i.e. drop in load) can be significant for systems like masonry and RC structures at large inelastic excursions and near ultimate strengths when damage to the structure is extensive. The load drop can be as large as 10% of the peak force reached in the cycle.

COMPONENTS OF A SLOW CYCLIC TESTING FACILITY

The development of a well-equipped testing facility is the most important first step in establishing the slow cyclic testing approach in its proper place in earthquake engineering research, education and design. The development and management of such a testing facility requires knowledge and experience in many diverse fields of engineering. Additionally, sweeping changes in modern times brought in by the digital revolution has added another dimension as well. A brief discussion of the most essential components required in a good slow cyclic testing facility is presented next. This discussion is not meant to be exhaustive and is not an authoritative treatment of the subject matter, as they touch upon many highly specialized areas. The objective is to provide an overview of relevant issues which one frequently deals with when working in such a facility.

1. Load Application System

Designing an efficient and inexpensive load application system requires a great deal of care and ingenuity and thus represent a highly valuable skill. Load application system primarily involves two components: (1) loading devices such as hydraulic jacks, suspended weights, etc. and (2) load reaction systems for applied loads to react against them. The loading system should be simple, accurately represent the loading environment, and be safe to operate.

Servo-Hydraulic Actuators and Controllers

Closed-loop, double-ending, double-acting, servo-hydraulic (SH) actuators are nearly standard loading equipment for slow cyclic tests. These actuators include a servo-valve and require a Hydraulic Power Supply (HPS), cooling system, and a servo-controller for its operation. These actuators are not only compact but can also provide a very long stroke (displacement) and are capable of applying high forces. However, these devices have a limited frequency range of application, although fortunately it is not a limitation for slow cyclic tests. Another difficulty in using SH actuators comes from their inherent significant non-linearities. Real time closed-loop control provides drive-signal modification to improve the accuracy of the applied displacement/load on a continual basis in real time. The advent of digital implementation of real-time closed-loop control techniques has improved the performance of SH actuators, providing greater repeatability and accuracy.

The sizing of a SH actuator system for slow cycle tests is essentially controlled by two parameters: peak force and stroke length (peak to peak, or double amplitude). These two quantities can be related to the load and deformation capacities of the largest size specimen that is expected to be tested in a chosen configuration. It is easy to assign these parameters for a particular test, but when ordering for a typical laboratory, they are limited to a large extent by the available resources and long-term research objectives. At the University of Michigan, a 890 kN SH actuator with a stroke length of 200 mm has been central to many slow cycle testings over the last 25 years. For a good size laboratory, a SH actuator of similar capacity would provide adequate flexibility and versatility for most research investigations. A few small force capacity actuators can be on-hand for simulating gravity loads and other force applications in a loading setup. However, a few large capacity actuators should be preferred over many small force actuators.

Other hardware — such as servo-controllers, HPS, cooling system, etc. — are chosen to serve all actuators. For slow cycle tests, the flow capacity required of HPS is modest, although if high frequency cyclic tests are anticipated, then the HPS size and the velocity requirement for the SH system become crucial parameters. SH actuators are velocity-limited devices, and the size of the HPS is directly proportional to the power (force times velocity) required by the test. HPS typically have electric motors as their prime movers, and their size depends on the continuous flow rate required of HPS. Additional flow not supplied by HPS can be provided by a bank of properly chosen accumulators. Careful planning is required in choosing a SH actuator system for a cyclic loading facility to make optimum use of available funds.

Screw Jacks and Controllers

Screw jacks are also used in many structural laboratories for the application of moderate levels of loads. Ball screw type linear actuators are typically available in the range of 5 kN to 500 kN, with long stroke lengths up to 1 m. They are cleaner, quieter and reliable. The screw jack actuation system is driven by an electric motor with a reduction drive gearbox and an impulse modulator frequency converter, which allows for variations in linear velocity of the jack and can be as low as 0.025 mm/s but cannot be quicker than a few cm/s. However, these jacks can be programmed to follow a displacement history with a very close tolerance of a few micro-millimeters. A displacement transducer senses the relative position of the jack shaft, and the controller adjusts the velocity function of the displacement to stop the jack at the specified position within tolerance limits. The high resolution and sensitivity of the displacement transducer is important for very precise control, and the digital displacement transducer meets the stringent requirement.

Hydraulic Jacks

Gravity loads are often simulated by the discrete application of loads at selected points. Since these loads are usually held constant during the test, no expensive hydraulic jacks or elaborate controls are required. An array of small and simple hydraulic rams is connected to a common or individual manual or electric pressure system operating at pressures from 21 to 69 MPa. Approximate load intensities are obtained from the pressure gauge and the piston area of the jack, although more accurate values are obtained by placing load cells between the ram and test specimen or the reaction system.

Reaction Frames and Floor/Walls

Reaction walls monolithically constructed with a strong reaction floor permit greater flexibility in comparison to steel reaction frames. Usually, walls are provided in pairs in the two orthogonal directions meeting at a corner. This arrangement is especially useful for testing planar structural components in upright position, where one wall is used as a reaction for the lateral loading system and where the wall perpendicular to it is used to provide lateral support and to restrain out-of-plane bending and twisting. The general dimensions of reaction wall/floor are governed by the size and capacity of the largest specimen expected to be investigated and by the available resources. The reaction wall/frame system must be non-yielding and possess a very high stiffness to ensure nearly true application of displacement loading to test specimens. This requirement assumes further importance in the case of specimens endowed with brittle behaviour and/or softening behaviour.

2. Instrumentation and Sensors

For meaningful interpretation of cyclic load tests, it is essential that a sufficient amount of proper instrumentation is mounted on the specimen to measure the quantities describing the load-deformation behaviour of the structure. The objective of the instrumentation is to find the relation between the "cause" and "effect", i.e., important deformation quantities can be related to force quantities which are the primary cause of deformations. For example, in the case of indeterminate structural components, instrumentation should also be considered internal to the specimen because internal actions cannot be determined with confidence from the measurement of only externally applied forces. In summary, the instrumentation process consists of the following activities: identification of quantities to be measured, selection of appropriate sensors of adequate sensitivity, installation of sensors on the specimen, calibration of sensors before and after the test, data acquisition from sensors, reduction, and analysis of acquired data for interpreting force-deformation relations (Sabnis et al., 1983).

For automation in test and measurement, it is necessary that only electronic instrumentation be employed. Such instrumentation consists of an array of transducers, which are electronic devices that sense physical phenomena and convert it into electric signals of voltage or current to be picked by recording devices or computers after necessary processing. The following types of transducers are typically used in structural laboratories.

Strain Gauges

The introduction of electrical strain gauges in the 1940s marked the beginning of a new era in experimental stress analysis, and today, it is very difficult to design an instrumentation system without them, Good strain gauging requires a significant amount of experience. There are many types of strain gauges available, but foil-type electrical-resistance strain gauges are the most popular kind. The choice of foil gauge material, backing material (carrier), adhesive, sealant, etc. play an important role in the overall performance of a gauge. Adhesive (cement) used for mounting the gauge should be strong, linearly elastic, and stable over an extended period of time. In cyclic load tests, material is subjected to large strains well into the inelastic range, and the strain gauges should be able to deform without cracking in the solder tabs or grid loops at the ends. The general-purpose foil strain gauges with polyimide carrier can be used only for strains up to 1.5% and are suitable only for measuring elastic strains where yield or fracture strains rarely exceed 1%. The maximum strain that a foil gauge can measure depends on gauge length, foil alloy, and carrier materials, as well as on the adhesive. Special post-yield strain gauges use double annealed foil grid and high elongation polyimide carrier, and are mounted with high elongation plasticized adhesive, such as urethane-modified epoxy adhesive. When proper care is taken in mounting them (for example, by preparing the surface and attaching lead wire without significant stress raisers), it is possible to reach strains in excess of 5% and even up to 20% (Kobayashi et al., 1987).

Encapsulated or embedment strain gauges are required for reinforcing bars in concrete members where environment conditions are severe. Waterproofing of a gauge is the most important step after mounting the gauge. Over a short period, the drift in zero reading of the gauge is largely due to the effects of moisture and humidity variations. Vibrating-wire strain gauges are expensive transducer systems which can be used inside concrete.

Force Transducers

Strain gauge-based load cells for tension, compression, and universal types are frequently required. The capacities of the load cells should be nearly same as the capacities of the load application system available in the lab. Moreover, the load cells come with many different attachments which should be kept in mind while designing the test setup. Pressure transducers also find application where load is distributed over a large area.

Displacement Transducers

Transducers based on electro-magnetic induction principle, such as Linear Variable Differential Transducer (LVDT) or Direct Current Differential Transducer (DCDT), provide precise measurement and offer unlimited resolution. However, they tend to be very expensive, especially when a large number of them are required to monitor displacements at many points of a test specimen. DCDT is a variant of LVDT which is fitted with a precision demodulator to convert AC output to DC, which is the most common output type for transducers.

Rectilinear and rotary potentiometers (commonly referred as *pots*), which use thick polymer film as a resistive element, are a cheaper alternative for measuring linear and angular positions. Recent advances in potentiometer technology have resulted in potentiometers of long life, low noise, and negligible degradation, with a linearity as low as 0.02% and resolution better than 0.01 mm. They are available in the wide range of a few millimetres (e.g. 2 mm) to a few meters (4 m). Wire potentiometers are used for large displacements and where the movement of a structure must not be restrained (especially in structures prone to buckling and sway instabilities). Any restraint against motions that might occur when instability takes place, such as a small reaction force from spring-loaded linear potentiometer, tends to increase the load capacity. Inertia and friction present in the mechanical sliding contact of the wiper-film system limits a potentiometer's sensitivity and reliability, which can be severely reduced with the wearing of the sliding contact. Contactless inductance devices (LVDT/DCDT) are expensive, but they do eliminate the disadvantages of wiper-film type potentiometer systems.

Direct readouts of mechanical dial gauges are frequently used to calibrate electronic displacement devices and verify/compare specimen deflections during the test. Dial gauges are quite compact, easy to apply and accurate — an accuracy of 0.0025 mm and 0.025 mm in full scale of 5 mm and 25 mm respectively, is typically available.

3. Data Acquisition and Control (DAC)

There are a variety of data acquisition solutions available in the market (Tippie et al., 1994). However, choosing the one that meets the requirement is rather difficult: under-specification results in poor performance, whereas over-specification increases the system costs. PC-based data acquisition and control systems are relatively inexpensive, use familiar architecture, hardware and operating system, are flexible and versatile, and the components and services are easily available from a large number of vendors (House 1991).

A computer is central to the system and has significant influence on the speed with which the data can be acquired. Newer PCI bus architecture can deliver throughput that is adequate enough for slow cycle tests. Direct Memory Access (DMA) can further increase system throughput, using dedicated hardware to stream data directly into the system memory. PC's are capable of programmed I/O and interrupt transfers, although the data acquisition board must allow these operations. The size of the hard disk limits the amount of data that can be acquired. The continuous polling of data during slow cycle tests, which can last hours, can be very demanding on a hard disk's storage capacity. A choice of selective polling only when the load is being applied can ease storage requirements.

Signal Conditioning

Electrical signals generated by transducers need to be conditioned before they are acceptable to data acquisition hardware. Typical signal conditioning operations include amplification of low-level signals, linearization, filtering of unwanted signals, and energization of some transducers. In many cases, amplification (gain) of signals is required to increase the resolution and to reduce noise. For the maximum resolution of the digitised signal, the full-scale voltage output of the transducer after appropriate amplification should map as high a percentage of the full-scale range of the analog to digital converter (ADC) as possible. Further, keeping amplifiers close to transducer, only high level signals travel to the PC, minimizing the effects of noise. Linearization of non-linear response can be done by the software too. A noise filter is typically used on DC-class signals to remove higher frequencies, whereas on AC-class signals (such as vibration), anti-aliasing type filter is required before the signals are digitized. Both are low-pass filters, however, a very steep cutoff rate is required for anti-aliasing filter to completely remove frequencies higher than the input bandwidth of the data acquisition board. Some transducers such as strain gauges, potentiometers, etc., need to be energized by external voltage or current source. Table 1 lists the characteristics of electrical output of commonly used transducers and the kind of signal conditioning that will be required.

Table 1: Signal Conditioning for Transducer Output

Transducer type	Output characteristics	Signal conditioning requirements
Strain gauges and load cells, pressure cells and other devices based on strain gauges	Low nonlinear resistance output of very low sensitivity	Voltage energization, Bridge completion circuitry, 3-wire connection and linearization
Potentiometers	High nonlinear resistance output of high sensitivity	Current excitation which converts resistance variation in voltage 4 wire/3 wire connection and linearization
Direct Current Differential Transformers (DCDTs) and other milli volt/volt inputs	Medium level voltage output	None Directly to acquisition boards

Data Acquisition Hardware System

Common data acquisition systems are specified by parameters which define the capability of the system and quality (accuracy) of digitized signals, such as number of analog input channels, sampling rate, resolution and input range. The number of input channels depend on whether they are single-ended or differential inputs. Single-ended inputs are referenced to common ground point and are used when input signals are high-level (≥ 1 V) and travel only short distances (≤ 5 m) from sensors to the acquisition hardware. When signal inputs do not meet these requirements, differential inputs are used, in which each channel has its own ground reference to cancel out the common-mode noise picked up by both lead wires (Morrison, 1986). The total number of channels required are equal to number of transducers employed in a test, which very much depends on the size of the specimen and number of quantities that need to be monitored. A 64 to 128-channel system is adequate for moderate size test specimens.

The sampling rate is number of conversions that take place at the ADC. The Nyquist theorem states that the sampling rate should be at least twice the rate of frequency of input signals to prevent aliasing. For slow cyclic tests, the sampling rate requirement is not too demanding, and 2 to 3 samples per second per channel are usually satisfactory. An ADC is the most expensive component in a data acquisition system and typically handles 8 to 32 input channels. When the number of channels is large, multiplexing is commonly used to route multiple channels to a single ADC. A multiplexer selects and routes a channel to ADC for conversion, switches to the next channel and repeats. Since the same ADC is sampling several channels, the effective rate of each individual channel is proportionately reduced. For example, a modest aggregate throughput of 100 kilo samples/s of an ADC is adequate for a 256 channel system to be used in slow cyclic tests. However, it will be grossly inadequate for vibration measurements where signals are changing too rapidly. Also, self-scanning multiplexed ADC sequentially scan channels; as a result, the exact time of sample is not known within the scan interval which can be several milliseconds. For slow cyclic tests, the resulting channel-to-channel time-skew is not serious where the most recent value of signal is adequate.

The smallest change in signal that a data acquisition hardware can detect depends on the resolution and range of ADC and the gain on the signal. Resolution means how many digits the ADC uses to represent the analog signal. The higher the number of digits (bits), higher will be the number of intervals in which the analog signal will be broken into and smaller will be the detectable change in voltage. A 16-bit ADC uses 65,536 bit combinations to represent the analog signal extremely accurately. Range means the maximum and minimum voltage levels in which the ADC is functional. The data acquisition system allows user to select the gain and range so that voltage resolution of the digitized signal can be maximized.

Sometimes, analog outputs are also required to control a physical process, for example, the load application process using a SH actuator. The servo-controller may have a feature in which a user-specified analog signal can be fed to control the SH actuator. A digital-to-analog converter (DAC) can be used to produce the required output analog signal. The slew rate, settling time and resolution determine the quality of the signal. The slew rate and settling time are critical parameters when generating high-frequency signals.

Triggers are provided to start or stop the data acquisition process by an external event. For example, digital triggers can be used to synchronise the acquisition with the function generator of servo-controller which controls the load application.

Control and Data Processing Software

Software is the most important component which integrates the transducers, signal conditioning equipment, and data acquisition hardware into a complete data acquisition system with control, analysis and display abilities. The basic driver software eliminates the tedious register-level programming and allows no more functionality than to simply get data on and off the system. However, application level software packages offer much higher level of functionality in a user-friendly environment and provide near total control of the hardware functions from inside the software.

4. Miscellaneous Equipment

In addition to loading and instrumentation devices, equipment is required for the material testing, fabrication of the test specimen, handling and positioning of the test specimen, etc. Equipment is required to obtain the basic behaviour of materials used in specimens such as stress-strain curves and other representative properties in accordance with applicable standards such as those of ASTM, BIS, etc. This equipment is as much essential as those required for actual testing. A high level of accuracy and precision in specimen fabrication is essential for good quality experimental results, that are predictive of actual behaviour. The kind of equipment required very much depends upon the material which will be used to fabricate the specimen, i.e., steel, masonry, RC, etc. and the size of the specimens. A list of equipment that are typically required are listed in Appendix.

EXAMPLE CASE STUDIES

Two experimental test programs are described in the following to illustrate various elements of slow cyclic tests discussed above. The focus is primarily on the modelling assumptions, design and fabrication of the test setup and the specimen, and execution of the test.

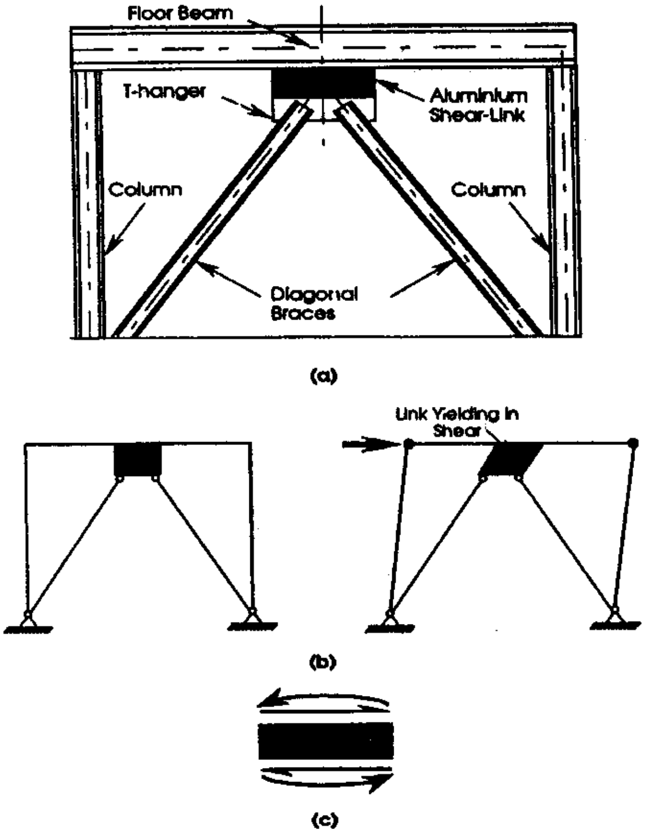

Fig. 5 (a) Schematic diagram, (b) Typical collapse mechanism of the proposed bracing system, (c) The isolated shear-link from the bracing system (Rai and Wallace, 1998)

1. Case Study- I : Evaluation of an Energy Dissipating Device

I-shaped beams of low yielding ductile alloys of aluminium, designed to yield in shear mode when suitably placed, can limit the maximum lateral force transmitted to primary structural members. They function as a metallic yielding device ("fuse") and can dissipate significant amount of energy. One such application is to use it in conjunction with Chevron bracing frame system, where an aluminium beam is sandwiched between the tops of diagonal storey braces and a beam from the floor above as shown in Figure 5(a). An experimental study investigated the hysteretic behaviour and stable energy dissipation capacity of aluminium shear-links, which is the key element in the structural system for earthquake resistance (Rai and Wallace 1998).

1.1 Modeling Process and Testing System

The shear-link was isolated from the bracing system as shown in Figure 5(c) for testing. The isolation process is based on the following assumptions:

1. When the structural system becomes inelastic, all inelastic actions are concentrated in the shear link only, which is a realistic assumption because shear-links of soft alloys of aluminium are designed to yield before other elements of the structure.

2. Shear-links carry zero net transverse forces which is justified considering the Chevron pattern of the diagonal braces where the vertical components of the braces are balanced.
3. Axial stresses introduced in shear-links at large drifts due to change in frame geometry are ignored.

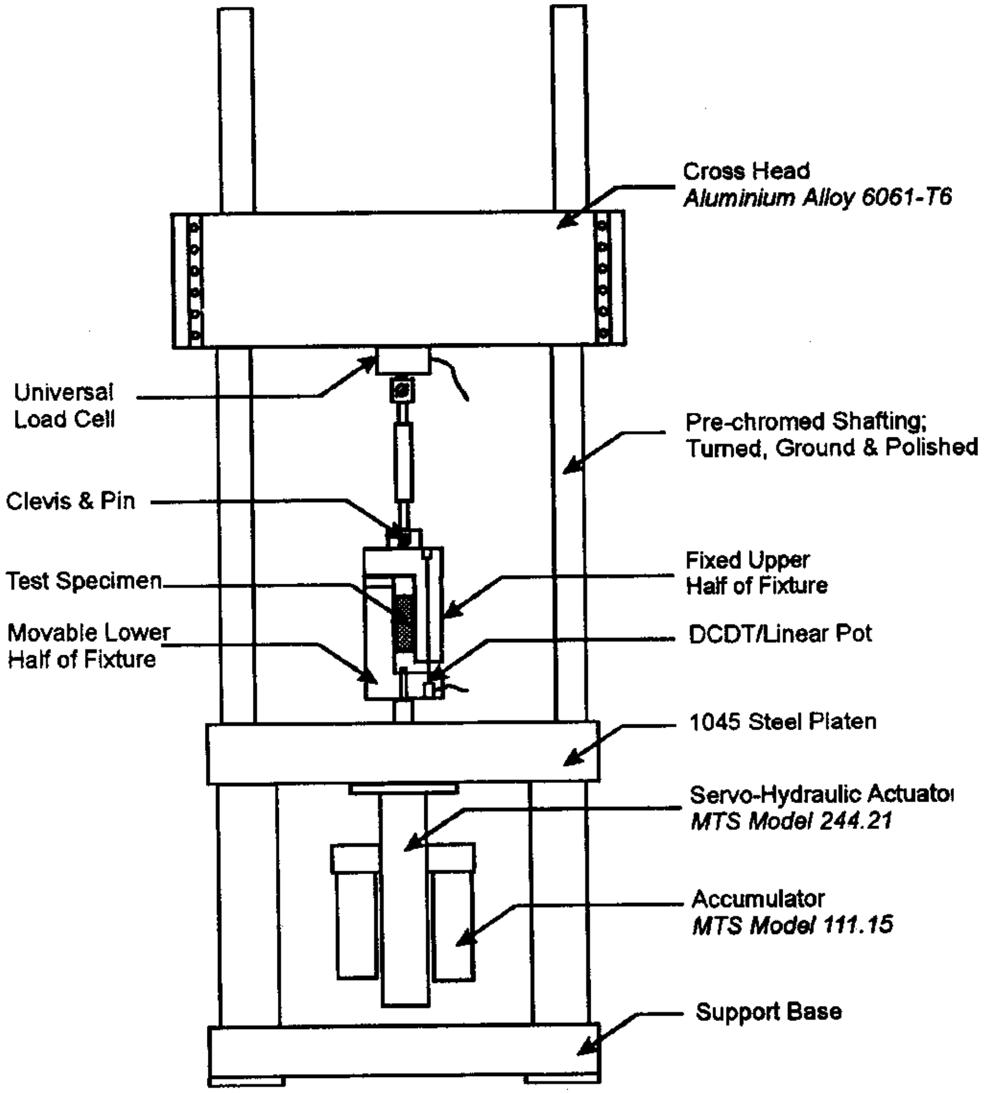

Fig. 6 Schematic of test setup for shear-links

Keeping in mind the above-mentioned modeling assumptions, a testing system was designed as shown in Figure 6. A medium scale of 1:4 was chosen for the model aluminium shear-links, which was the best compromise between specimen manufacturing ease and the available test equipment. The resulting link strength was well within the 55.6 kN capacity of the available seismic actuator which could impart a displacement of 76.2 mm at the required velocity for faster loading rates to study strain rate effects.

The load was transferred from the actuator to the specimen through a rigid L-shaped member which moved up and down with the actuator. The specimen was bolted securely to the vertical limb of the bottom fixture. The other flange of the specimen was bolted to the vertical leg of the top fixture. A second vertical leg of the top fixture was laterally braced with the vertical limb of the bottom fixture by turnbuckle links with spherical bearings. The arrangement provided the system stability and prevented out-of-plane bending and twisting. Details of the fixture are shown in Figure 7. A 55.6 kN universal load cell was attached between the cross head of the 244.6 kN reaction frame and the top part of the fixture. Loads were applied to the web centerline.

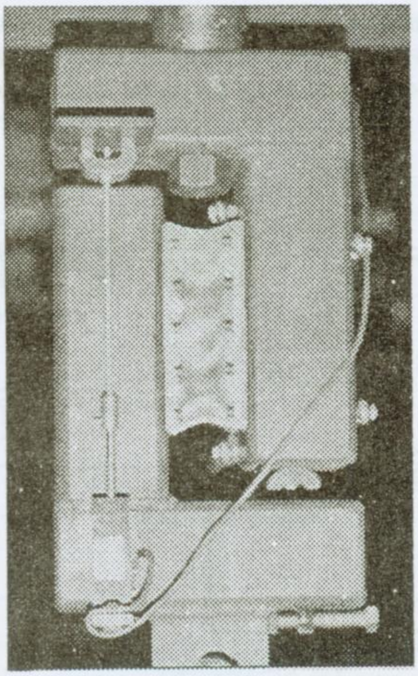

Fig. 7 Shear-link specimen in the loading fixture

1.2 Instrumentation

The behavior of a shear link is reflected in the forces and deformations that result from subjecting it to different loading histories. The instrumentation used to measure these included a universal load cell, linear potentiometers, and LVDT. The measurement of force in the specimen was accomplished directly via a load cell located as shown in Figure 8. The resolution of the data obtained from the transducer was 22.2 N. With the force known, the average shear stress in the web of the specimen could be obtained by strength of materials formulae. Displacement transducers were employed to monitor the loaded specimen's movements. A pair of these transducers were mounted on the vertical limb of the loading fixture on either face in diametrically opposite locations. The average reading of the two instruments provided the measure of shearing deformation in the plane of the web of the specimen. LVDTs were used as displacement transducers for that part of the test when displacements were very small and the test was conducted in the stress-controlled mode. During the strain-controlled regime of the test, the resulting large movements were measured by the linear potentiometers. Resolution of the linear potentiometers was 0.01 mm and that of the LVDTs was 0.005 mm.

1.3 Data Acquisition and Control Hardware

The general block diagram for the testing and data acquisition system used in this study is shown in Figure 8. Central to this testing system is a PC which is interfaced with the MTS servo-controlled loading system to completely control the application of the load. The analog electric inputs as generated by the transducers were amplified by either the MTS-406 signal conditioner or a Pacific Instruments amplifier with output to the computer as 10 V DC signals. The actuator LVDT was AC-driven by a conditioner power supply which demodulated the output to produce a 10 V DC signal proportional to the displacement. The two small LVDTs contained their own oscillators and demodulators to produce a DC voltage signal. The linear potentiometers gave an output of -2.5 to + 2.5 V DC over their full range. The signals from the small LVDTs and linear potentiometers were then amplified to obtain the maximum possible resolution. Thus, all analog inputs necessary for the tests were available in the -10 to + 10 V DC range over which the 12-bit ADC was most functional with the resolution of 5 mV.

Two methods of generating command signals were utilized in this test program. For the slow cyclic loading of specimens, D/A converter of the data acquisition board was utilized to generate the control signal. For the faster loadings of specimens, the function generator and counter built into the MTS 436 control unit were used to provide the command signals for the load waveform. The function generator used to provide the command signals for the load waveform output of a synchronized signal which is sensed by the counter card of the processor as well as by the visual digital counter built in to the servo hydraulic MTS 436 Control Unit.

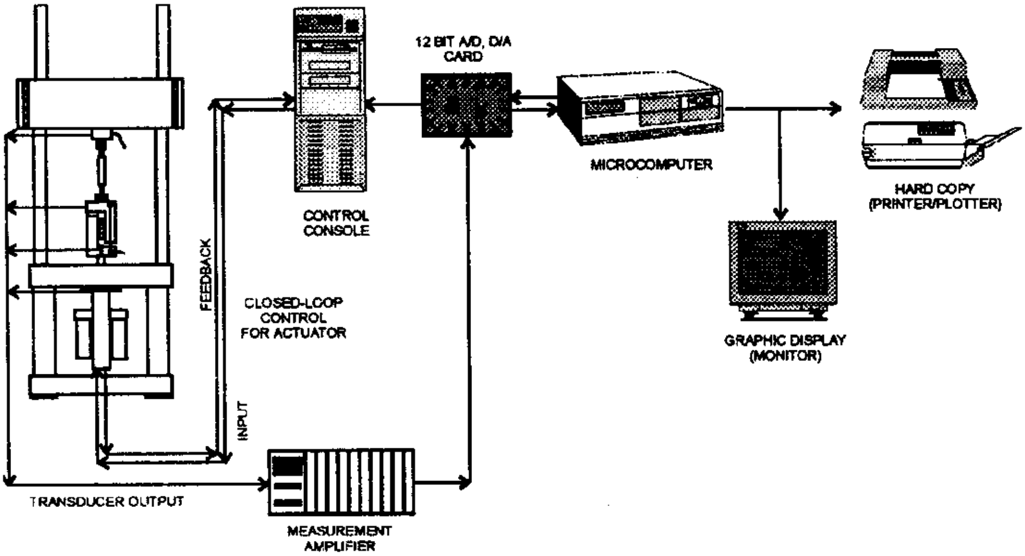

Fig. 8 Block diagram of the shear-link testing system

The analog electric inputs from the load and displacement sensors flow through custom made front end circuits before being picked up by the ADC. For the 12-bit data acquisition system used in this study, the total number of digits that could describe the full -10 to +10 V range was 4096, with the best accuracy of the system being 1 digit. This combination of 4096 counts and 20 V range results in a maximum resolution of 5 mV. For some transducers, the resolution of 5 mV was not sufficient to properly define each data point. This problem was circumvented by amplifying the load and displacement voltages by a factor of 5, though the signal-to-noise ratio remained constant after amplification. To reduce the effect of both the electrical and mechanical noise on the load and displacement signals, low-pass filters were used after the amplification of the signals. The digital data output was stored in the computer hard disk.

1.4 Data Acquisition Software

The same data acquisition hardware was utilized for the entire testing program, however, it was controlled by two different software programs to monitor electronically the response of the specimens. A semi-continuous program was employed in the slow testing of the specimens conducted for material evaluation. To study the strain rate effects on the performance of the specimens, a continuous data acquisition program was employed. During slow tests, the program not only provided a computer control of the MTS system but also enabled real-time feedback from the test results as the test progressed. The x-y plotting capabilities of this program were used to observe the behavior of the specimens during the test and to monitor the test. The program was instructed manually to read a data point and update the monitor screen. After every twenty data points were stored in the computer core, they were transferred to the hard disk. During this data dump, the test stayed still. Therefore, continuous operation of the test was not possible with this software.

For high-rate tests, a different software was used which allowed the data to be recorded as a continuous intermixed string of numbers in binary integer code. The program then sorted the individual channel measurements and converted the results to the actual physical measurements which were then stored in disk files. Data reduction programs were then used for plotting and analysis of the data. The computer's RAM was first used to store the data from the entire test and then transferred to the hard disk after the test was completed. The function generator of the MTS controller was used for the application of the load at the required cycling frequency. The coordination between the actual time of test and data collecting was obtained manually, which resulted in a time lag between these two activities. However, care was taken to ensure that data acquisition was triggered before the actual run of the test, so that no data was lost.

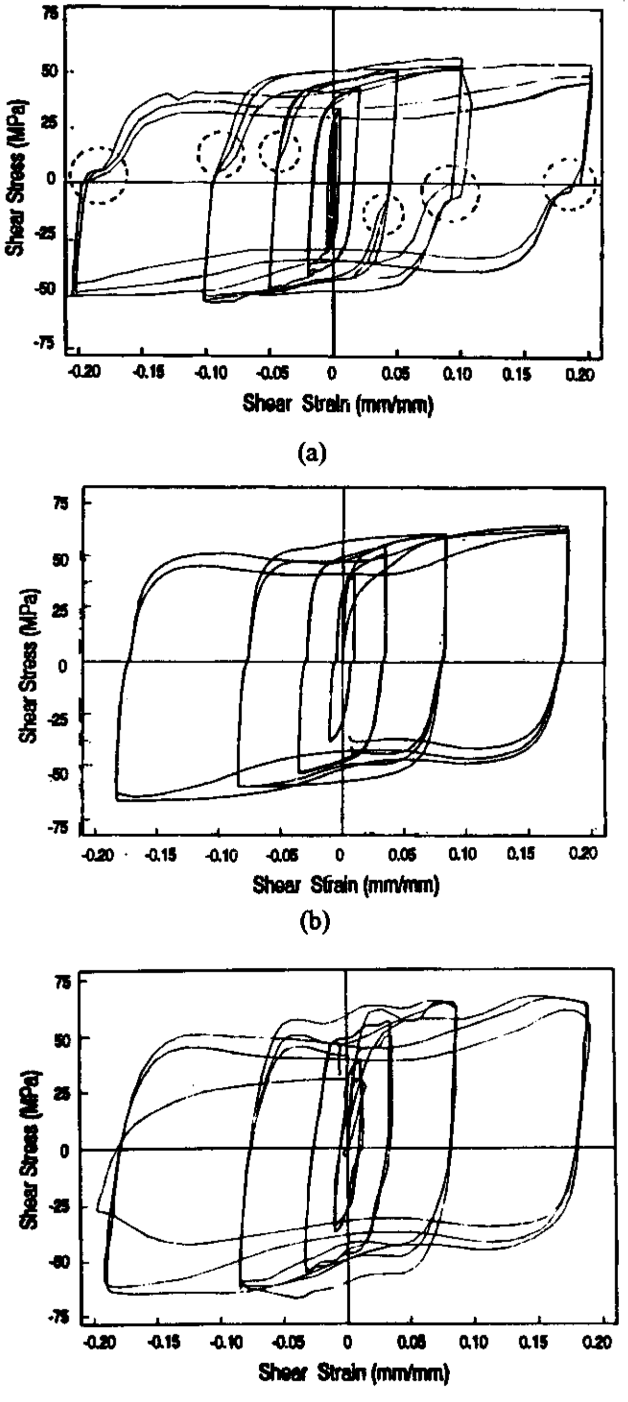

(a)

(b)

(c)

Fig. 9 (a) Bolt slippage causing loss of stiffness, (b) Offset due to lack of fit in the linkage noticeable at slow (0.01 Hz) cycling frequency, (c) The offset not noticeable at 10 Hz cycling frequency

1.5 Loading History

Specimens were subjected to sinusoidal input waves during both the stress and strain-controlled regimes of the testing program. For quasi-static tests, a typical loading program began with three cycles at 8.3 MPa of web shear stress, and then with three cycles at 20.7 MPa, which was near the expected yield stress of the web material. At this stage, the experiment was switched to the strain-controlled mode, and groups of three cycles were performed at strain levels of 0.002, 0.005, 0.02, 0.05, 0.1, 0.2 (mm/mm), etc., until specimen failure. Each cycle consisted of two displacement excursions from the state of zero load — one in the downward direction (i.e. "tension" for the actuator) and the other one in the upward direction (i.e. a "compression" for the actuator). To understand the effect of different strain rates on the shear-link behaviour, specimens were tested at three cycling frequencies - 5, 10 and 17 Hz. One specimen was tested at a frequency of 0.01 Hz. This can be considered as representative of a slow cyclic test, which served as the basis for comparison. The loading program comprised of 3 cycles, each of 0.005, 0.02, 0.05, 0.1 and 0.2 (mm/mm) strain.

1.6 Effects of Bolt Slippage and Lack of Fit

A typical stress-strain hysteretic behaviour of a shear-link is shown in Figure 9(a). Web yielding was observed at 0.002 strain, and web buckling commenced during the 0.1 strain cycle. Shortly after each load reversal (see regions in side the dashed circles in Figure 9(a)), some loss of loading stiffness was observed due to bolt slippage at the connection between the specimen and the loading fixture. The specimen section was modified and more fasteners were employed to circumvent this problem. Figure 9(b) shows the hysteretic response of the modified specimen. In this specimen, the bolt slippage is negligible, but a small offset was noted at each load reversal due to some slack in the linkage, because strains are computed using displacement data from the MTS stroke measurement rather than the LVDT/pot fixed close to specimen on the fixture. In addition, some deformation of the test setup also entered in the measurement. The constant amount of error due to the lack of fit becomes progressively smaller in relative terms with larger strain cycles. However, this effect of lack of fit is not observed in the specimen which was tested at higher cycling frequency. Figure 9(c) shows hysteretic behaviour of specimen tested at cycling frequency of 10 Hz. No offset was noted at load reversals which is in contrast to specimen tested at slow frequency of 0.01 Hz as shown in Figure 9(b).

2. Case Study- II: Evaluation of Seismic Strengthening of URM Piers Using Steel Bracing

Steel bracing elements have been used to improve seismic performance of the perforated unreinforced masonry (URM) walls. However, they are designed without much regards for ductility and beneficial effects of masonry-bracing interaction. As a result, they not only tend to be uneconomical, but also their performance in the event of extreme seismic events is questionable. An experimental investigation was undertaken to evaluate the current design practice for in-plane seismic strengthening of URM wall piers that use steel bracing under cyclic loadings and to understand the load-sharing mechanism of URM piers and steel elements (Rai and Goel, 1996).

2.1 Modelling Process

Specimen Description

The test specimen was a half-scale model of the third story exterior window wall of the test building. Its two-wythe thick (216 mm) wall represented the four-wythe (432 mm) thick wall of the prototype and was approximately 1.68 m (22 courses) high and 2.34 m long, as shown in Figure 10. Four piers, approximately 0.53 m wide and 1 m high, were created in this wall by three 76 mm wide openings. It was assumed that the behaviour of the wall was largely influenced by the size of the piers, and not by the width of the openings, i.e., the effect of the spandrel beams over the openings is negligible. This assumption may not be quite true for a wall which has fewer openings arranged in such a way that the resulting piers are stronger than the spandrel or link beams. However, for the majority of the URM buildings, the wall which faces the street contains most of the openings in such a way that the piers so formed govern the lateral resistance of the wall.

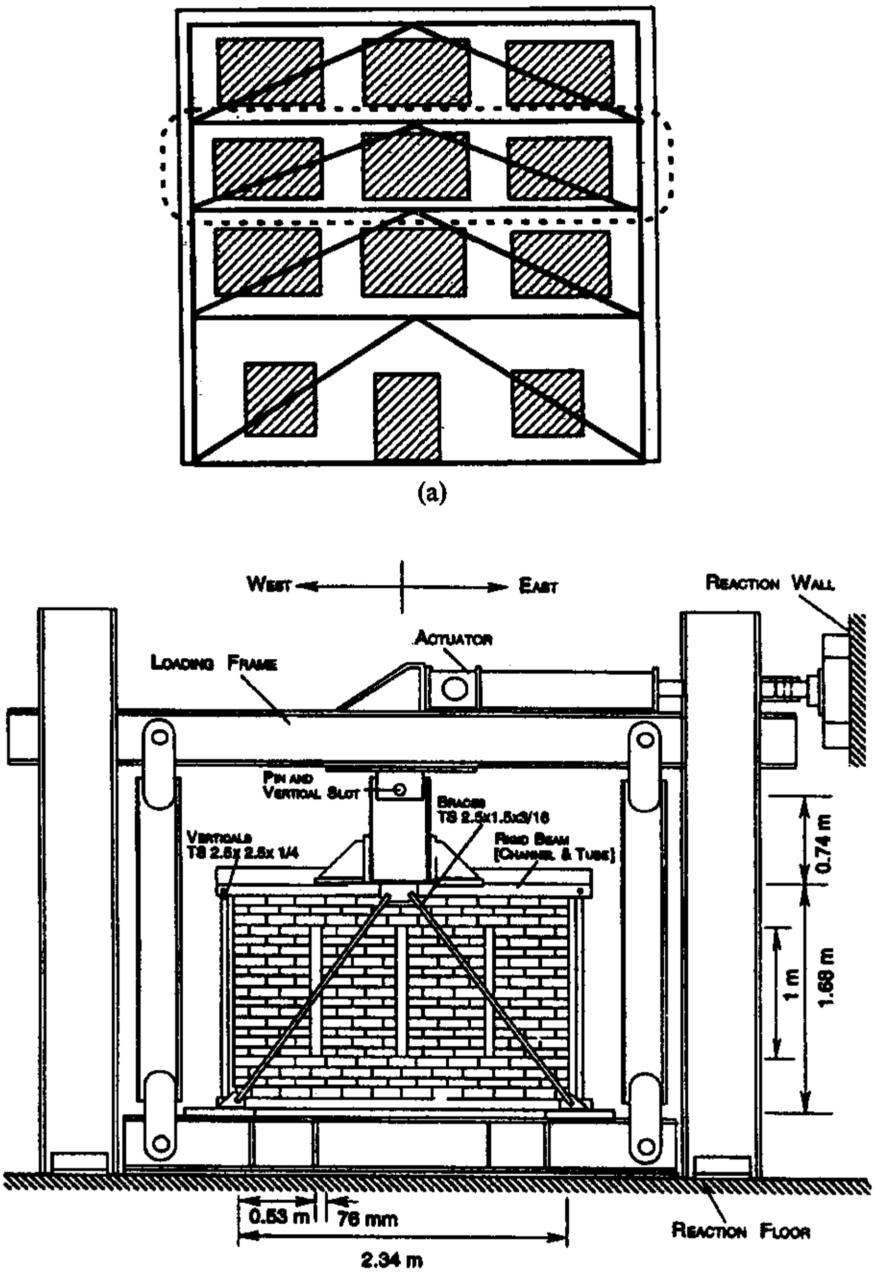

Fig. 10 (a) Strengthening bracing system and isolation of the third storey for testing, (b) Schematic of loading frame and the test specimen

A FEM study was carried out to verify the validity of the assumption that the storey behaviour of rocking piers is unaffected by the size of the openings. A general purpose computer program ABAQUS (Hibbit et al., 1995) was used for its ability to model the various sources of non-linearities expected in a complex system of masonry and steel elements. FE analyses of URM walls were performed which differed only in the description of the openings. Figure 11(a) shows the deformed configuration of the FE model at a storey drift of 1% which confirms the rocking motion of the piers. Figure 11(b) compares the overall shear resistance of the model with large openings (truly scaled) to one with narrow slit like openings. A close match indicates that the size of the openings has a negligible effect on the behaviour of the rocking piers, especially at storey drifts below 0.5%.

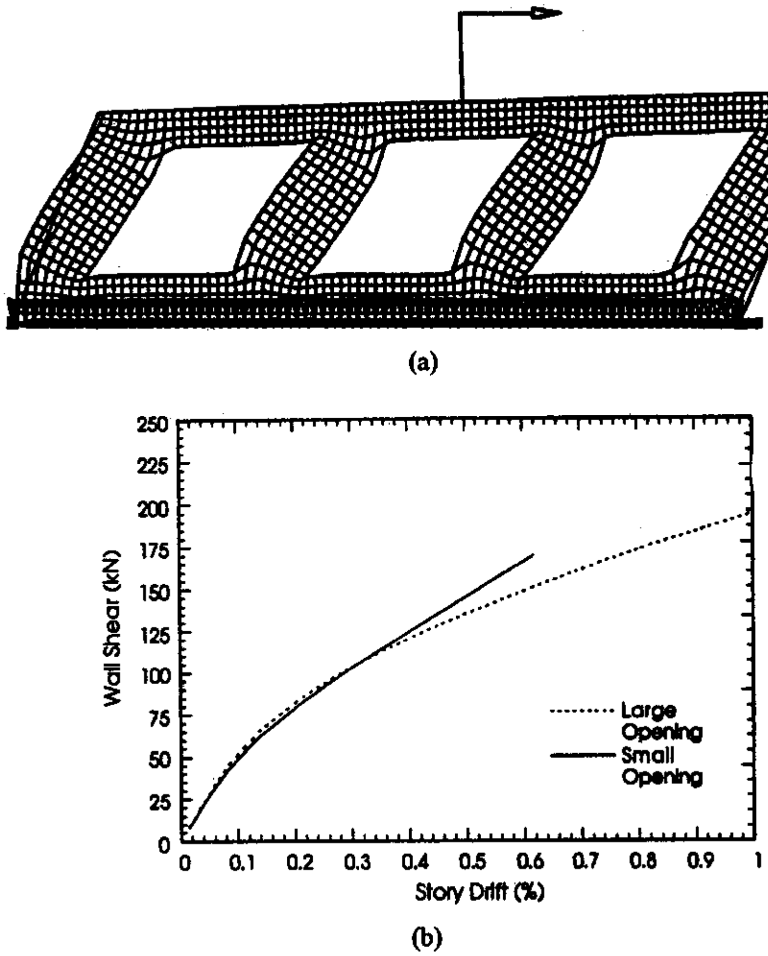

Fig. 11 (a) Deformed geometry of URM rocking pier system of third storey of the study building, (b) Comparison of shear behaviour of the with and without true "size" of openings

Masonry

The masonry of the wall was laid in running bond with a header course located every fourth course. Reclaimed bricks from a 60 to 70 years old building were used, which were approximately 203 mm long, 98 mm wide and 57 mm thick. The average mortar size was approximately 9.5 mm thick. The early 1900s was a period of negligible codification and great experimentation with cement and cement mixes, and thus a great variety of mortar mixes were in use (Noland et al., 1982). The mixes were made of either cement, lime and sand; cement and sand; or lime and sand. Portland cement was not always used because there are references to Rosendale, Roman, natural and hydraulic cements also. With this large variability of the mixes, it was difficult to choose one representative mix for the specimen. However, the objective is to simulate a masonry which gives an in-place push test shear strength within the range of 0.2-0.8 MPa, commonly found in existing buildings. Type N mortar mix with volume proportions of portland cement: hydrated lime: sand of 1:1:6 was used. This mix has also been used in some previous studies to simulate old mortars. Two in-place push tests, as detailed in the UCBC (1991), were performed on the specimen and the test shear strength was found to be 0.76 MPa. Various tests were carried out to determine the basic reference properties of the masonry materials in accordance with relevant ASTM standards.

Steel Braces and Verticals

The braces were designed according to the UCBC (1991) to resist all the lateral design seismic forces, and tubes of size 2.5 x 1.5 x 3/16, ASTM A500 Grade B were used. The yield strength of the brace steel was found to be 462 MPa by performing tensile tests on coupons taken from the tubes used. The braces were oriented with their weak axes perpendicular to the plane of the wall which would prevent out-of-plane buckling of the braces in order to avoid possible interference with the wall. Pin-ended vertical steel members were provided at both ends of the wall, and they resisted only the overturning moment, whereas shear is fully resisted by the wall and the braces. This idealized end condition for the steel verticals was used to simplify the determination of lateral force resisted by the wall.

Boundary Conditions and Eccentricities

A vertical eccentricity of 0.74 m is created in the specimen by applying the load above the work-point of the braces which induces a moment on to the wall. This represents the overturning moment experienced by the third story wall in the study-building due to seismic forces acting on the top story. This eccentricity is calculated on the basis of the basic design seismic story shears which implicitly assumes that the distribution of the story shears does not change during the loading. This is especially true for majority of such low-rise URM buildings whose response is predominately affected by the first natural mode of vibration.

In practice, the actual load path from the diaphragm to the wall and then to the braces is rather complex. This is simulated in a simple manner by applying load at an eccentricity with respect to the wall and the bracing. The applied load was such that the line of resistance of the wall and bracing coincided with the line of loading. The horizontal eccentricity is computed based on the predicted ultimate resistance of the wall and the steel braces. Since this eccentricity is kept constant during the loading, it is assumed that at all levels of loading, the ratio of the wall and brace resistance remains invariant, which may not be true once the wall starts degrading at a faster rate than the braces.

2.2 Test Set-up

The loading apparatus consisted of a four-hinged frame and a double-acting servo-hydraulic actuator. The frame is laterally supported by two inverted U-shaped frames which guide the movement of the top girder of the loading frame in a vertical plane and restrain any out-of-plane motion. The actuator has a force capacity of about 890 kN and a maximum stroke of about 203 mm. The wall was mounted inside this frame as shown in Figure 12. It was set on a steel channel in a thin layer of mortar at the bottom and was topped by an inverted channel stiffened with a tube, also placed on a thin layer of mortar. In addition to these mortar joints, shear connectors were provided along the width of the wall to help transfer the load between the steel channels and the masonry wall, and to prevent any slippage of the wall relative to the channel. The top channel was provided with a vertical stub of wide flange section which was connected through a pin with vertical guide to the top girder, as shown in Figure 10. The vertical slot is necessary to allow free vertical movement associated with the horizontal movement of the loading top beam of the four-hinged frame.

2.3 Instrumentation

The instrumentation consisted of linear potentiometers, LVDTs, strain gauges and a universal load cell. Linear potentiometers and LVDTs were used to measure the displacement of the top of the wall relative to the fixed bottom, and shear deformation of the piers by arranging them in a diagonal pattern as shown in Figure 12. The strain gauges of high strain capacity (5%) were mounted on the braces and the verticals to measure the axial strains and thus the axial forces. They were mounted at one-thirds positions along the length to avoid possible non-uniform stress variations near ends and localized large strains near mid-height after brace buckling. At a section, four gauges were mounted whose voltage outputs were first read in single bridge configuration and later processed to remove affects of bending to determine the axial strains and axial forces. Alternatively, they could have been wired in a full-bridge configuration or two half-bridge configurations. The load cell provided in the actuator arm measured the total horizontal force resisted by the wall-brace assembly. The shear resisted by the wall was obtained by subtracting the shear resisted by the braces from the total applied actuator load.

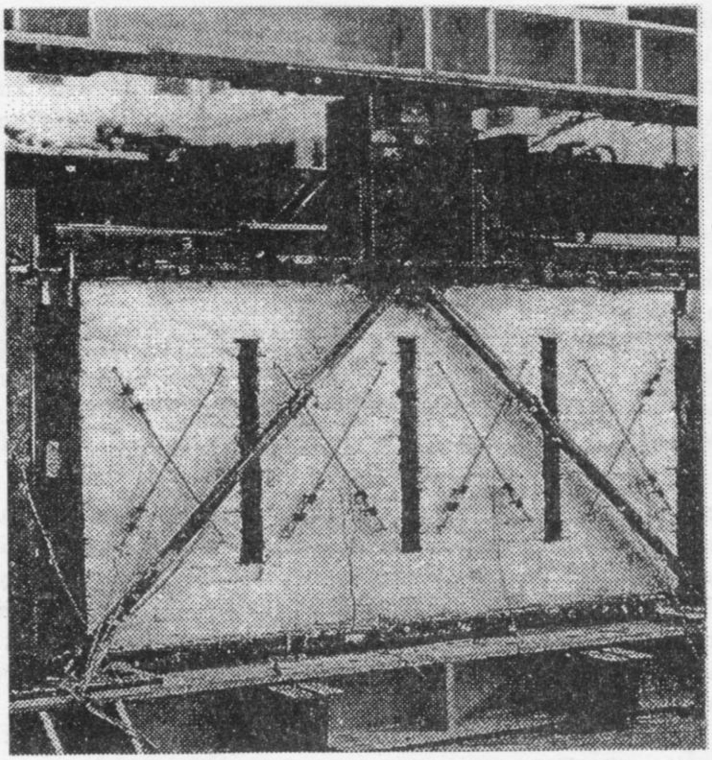

Fig. 12 Test specimen and instrumentation inside the loading frame

2.4 Loading History

The specimen was subjected to a simple multiple-step loading history which consisted of symmetric cycles of increasing amplitude in predetermined steps. This is consistent with the primary purpose of the test, i.e., to obtain the basic performance of the test specimen under cyclic loadings. The loading history used for this test is shown in Figure 13 which maximizes the information that can be obtained from the single specimen testing. The strengthened specimen is not expected to deteriorate rapidly, and therefore, the loading program does not include decay cycles. The loading began with force control mode, and one cycle was performed at 53.4 kN and at 111.3 kN of load. First flexural cracking was observed at the top of the pier at a load of 109.0 kN, at story drift of 0.08%, which was used as the "yield" or the "first major event" (FME) of the test for determining next steps of loading history. At this stage, the test was switched to displacement control mode and two cycles each were performed at story drifts of 0.15, 0.3, 0.45, 0.75 and 1.06%, in approximate multiples of FME displacements.

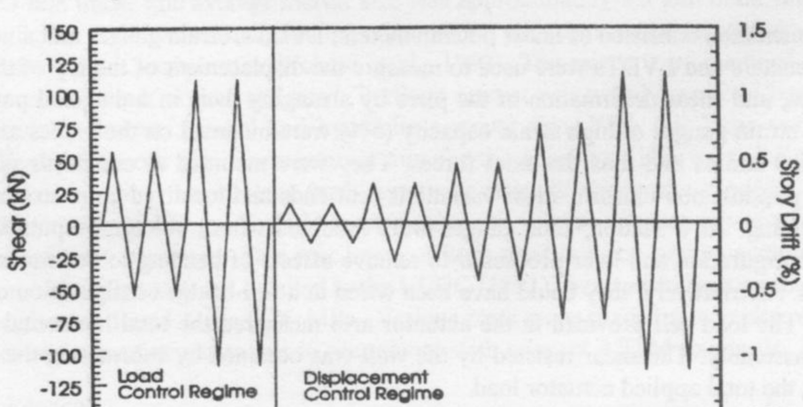

Fig. 13 Loading history in load and displacement control regimes

CONCLUSIONS

The application of experimental techniques in physically modelling structural problems will most likely always be one step ahead of the analysis for the development of new structural forms and materials, where mathematical analysis is not adequate or feasible. One of the aims of this paper is to encourage researchers to use slow cyclic load tests as an important complement to analytical procedures, and to consider it as an integral part of research and development programs for improving current design practices. This simplified experimental technique provides a consistent basis for the research and development of tools for better earthquake-resistant design. The ATC-24 report provides comprehensive guidelines for slow cycle testing of sub-assemblages and discusses issues that affect the interpretation and usefulness of experimental data obtained from such tests. A well-equipped laboratory, careful planning of the test program, and proper execution are all essential for a good experiment. Considering the high seismic vulnerability of India's built environment, it is very important that experimental research is encouraged, and setting up good slow cyclic test facilities will be the first step in that direction.

ACKNOWLEDGMENTS

The author is grateful to Dr. Benjamin J. Wallace for introducing him to the exciting world of experimentation. The excellent structural laboratory facilities at the University of Michigan, Ann Arbor and shake table facility at the University of Roorkee, Roorkee, provided him further opportunities of learning by way of experimenting. Acknowledgments are also due to a number of individuals in India who invited and supported his visit to their institutions and laboratory facilities: Professors Navin C. Nigam (formerly at IITD), R.N. Iyengar (formerly at CBRI), K.S. Jagadish (IISc Bangalore), Sudhir K. Jain (IITK), V. Kalyanraman (IITM), and Alok Goyal and Ravi Sinha (IITB).

REFERENCES

1. Abrams, D.P. (1996). "Effects of Scale and Loading Rate with Tests of Concrete and Masonry Structures", Earthquake Spectra, Vol. 12, No. 1, pp. 13-28.
2. ATC (1992). "Guidelines for Cyclic Seismic Testing of Components of Steel Structures", Applied Technology Council, Redwood City, CA, U.S.A.
3. Basha, H.S. and Goel, S.C. (1994). "Seismic Resistant Truss Moment Frames with Ductile Vierendeel Segment", Report UMCEE 94-29, Dept. of Civil and Env. Engrg., Univ. of Michigan, Ann Arbor, MI, U.S.A.
4. BSSC (1994). "NEHRP Recommended Provisions for Seismic Regulations for New Buildings, Part 1: Provisions", FEMA 222A, Building Seismic Safety Council, Washington, D.C., U.S.A.
5. Chien, S.–H. and Wight, J.K. (1994). "Testing and Analysis of Existing Slab-Column Frame Building and Analysis of Retrofitting with Steel Bracing", Report No. UMCEE 94-31, Dept. of Civil And Env. Engrg., Univ. of Michigan, Ann Arbor, Michigan, U.S.A.
6. Derecho, A.T., Iqbal, M., Fintel, M., and Corley, W.G. (1980). "Loading History for Use in Quasi-Static Simulated Loading Test", Reinforced Concrete Structures Subjected to Wind and Earthquake Forces, ACI Special Publication SP-63, pp. 329-344.
7. Goel, S.C. and Itani, A.M. (1991). "Seismic-Resistant Special Truss-Moment Frames", J. Struct. Div., ASCE, Vol. 120, No. 6.
8. Hibbit, Karlson and Sorenson (1995). "ABAQUS User's Manuals", Version 5.4, Hibbit, Karlson and Sorenson Inc, Providence, RI, U.S.A.
9. House, R. (1991). "Data Acquisition Fundamentals", Application Note 007, National Instruments Corp., Austin, TX, U.S.A.
10. Itani, A.M. and Goel, S.C. (1991). "Earthquake Resistance of Open Web Framing Systems", Report No. UMCE 91-21, Dept. of Civil Engrg., Univ. of Michigan, Ann Arbor, Michigan, U.S.A.
11. Joint Technical Coordinating Committee on Masonry Research (1987). "TCCMAR Sequential Phased Displacement Test Procedure".

12. Kobayashi, A.S. (Ed.) (1987). "Handbook on Experimental Mechanics", Prentice-Hall, NJ, U.S.A.
13. Krawinkler, H. (1996). "Cyclic Loading Histories for Seismic Experimentation on Structural Components", Earthquake Spectra, Vol. 12, No. 1, pp. 1-12.
14. Krawinkler, H. (1988). "Scale Effects in Static and Dynamic Model Testing of Structures", Proc. Ninth World Conf. on Earthquake Engrg., Tokyo-Kyoto, Japan, Vol. VIII, pp. 865-867.
15. Leon, R.T. and Deierlein, G.G. (1996). "Consideration for the Use of Quasi Static Testing", Earthquake Spectra, Vol. 12, No. 1, pp. 87-109.
16. Masri, A.C. and Goel, S.C. (1996). "Seismic Design and Testing of an RC Slab-Column Frame Strengthened by Steel Bracing", Earthquake Spectra, Vol. 12, No. 4, pp. 645-666.
17. Montgomery, D.C. (1991). "Design and Analysis of Experiments", John Wiley & Sons, New York, U.S.A.
18. Morrison, R. (1986). "Grounding and Shielding Techniques in Instrumentation", John Wiley & Sons, New York, U.S.A.
19. Paulson, T.J. and Abrams, D.P. (1990). "Correlation between Static and Dynamic Response of Model Masonry Structures", Earthquake Spectra, Vol. 6, No. 3, pp. 573-592.
20. Rai, D.C. and Wallace, B.J. (1998). "Aluminium Shear-Links for Enhanced Seismic Performance", Earthquake Engrg. & Structural Dynamics, Vol. 27, pp. 315-342.
21. Rai, D.C. and Goel, S.C. (1996). "Seismic Strengthening of Unreinforced Masonry Piers with Steel Elements", Earthquake Spectra, Vol. 12, No. 4, pp. 845-862.
22. Sabnis, G.M., Harris, H.G., White, R.N. and Mirza, M.S. (1983). "Structural Modeling and Experimental Techniques", Prentice-Hall, N.J., U.S.A.
23. Tippie, J.W., Cooper, D.A. and Cleary, R.T. (1994). "High Performance Data Acquisition and Control", Kinetic Systems Corporation, Lockport, IL, U.S.A.
24. UCBC (1991). "Uniform Code for Building Conservation", International Conference of Building Officials, Whittier, CA, U.S.A.

APPENDIX: Auxiliary Equipment and Facilities to Support a Slow Cyclic Test Facility

No.	Category	Uses	Equipment
1	Material Testing Facility	Concrete cube/cylinder as well as tension coupon test	Universal testing machine capable of large compressive and tensile capacities displacement control loading facility for post-peak behaviour. Various tools and grips to hold specimens etc.
2	Machining Centre	Machining operations such as turning, milling, shaping, drilling, sawing, and grinding are frequently required in specimen fabrication. Welding and arc cutting for carbon and low alloy steels	Single spindle automatic Lathe Vertical knee type drilling machine Vertical ram type spindle knee-and-column milling machine Contour band saw Cut-off band saw Portable cut-off and grinding machines Short-circuit welding machine (Gas metal arc welding, GMAW or Flux core arc welding FCAW process) Arc-cutting machine (oxy-acetylene torch)
3	Electronics Workshop	Instrumentation installation and verification	Oscilloscope, multimeter, soldering station and miscellaneous
4	Concrete Mixing and Curing Facility	For fabrication of concrete specimens	Sieve analysis equipment for fine and coarse aggregate Weighing balances and platform Concrete mixer Bench vibrators and Needle vibrators Curing tank Pre-stressing bed, jacks, etc.
5	Heavy Loads Handling Ability		Overhead crane to handle maximum size specimen for entire lab floor area Fork lift truck for areas unserviced by crane